NOT FOR REPRODUCTION

LB VACUUM Owner's Manual

LB352

Beginning Serial #: 020316001

Accessories

HOSE KIT	HOSE CONNECTOR KIT	STANDARD FELT DEBRIS BAGS	OPTIONAL TURF DEBRIS BAGS
4" x 7' (102mm x 3.05m) For vacuuming in hard to reach areas.	To connect two lengths of 4" hose (hose not included).	For use in dusty conditions.	For use in leaves and grass in non-dusty conditions.
P/N 900460	**P/N 890045**	**P/N 900719**	**P/N 900722**

Original Instructions

IMPORTANT- READ CAREFULLY BEFORE USE AND KEEP FOR FUTURE REFERENCE

CONTENTS

SPECIFICATIONS AND SAFETY 3

INSTRUCTION LABELS 4

PACKING CHECKLIST & ASSEMBLY 5

OPERATION 6

MAINTENANCE AND TROUBLESHOOTING 7

ILLUSTRATED PARTS & PARTS LISTS 8-9

DECLARATION OF CONFORMITY 10-12

NOT FOR REPRODUCTION

SPECIFICATIONS

LB352

Engine cc	140cc
Engine type	B & S 500 series
Engine model	09P6020060F1
Engine fuel capacity	.9 qt (.85 L)
Engine oil capacity	18 to 20 oz. (.54-.59 L)
Total unit weight	57# (25.85 kg)
Overall length	47" (1.19 m)
Overall width	21.5" (0.55 m)
Overall height	40.5" (1.02 m)
Max. operating slope	20^0
Sound in accordance with 2000/14/EEC standards	97 dBa
Sound at operator's ear	77 dBa
Vibration at operator position	.5g (5.17m/s^2)

SAFETY

WARNING

This product can expose you to chemicals including gasoline engine exhaust, which is known to the State of California to cause cancer, and carbon monoxide, which is known to the State of California to cause birth defects or other reproductive harm. For more information go to www.P65Warnings.ca.gov.

NOT FOR REPRODUCTION

INSTRUCTION LABELS

The labels shown below were installed on your BILLY GOAT® LB Vacuum. If any labels are damaged or missing, replace them before operating this equipment. For your convenience in ordering replacement labels, part numbers are included in the Illustrated Parts List. The correct position for each label may be determined by referring to the Figure and Item numbers shown.

LABEL DANGER KEEP HANDS AND FEET AWAY
ITEM #67 P/N 400424

LABEL SAFETY PROTECT ITEM #76
P/N 100346

DANGER FLYING DEBRIS
ITEM # 73 P/N 810736

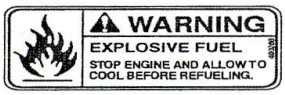

LABEL EXPLOSIVE FUEL
ITEM # 75 P/N 400268

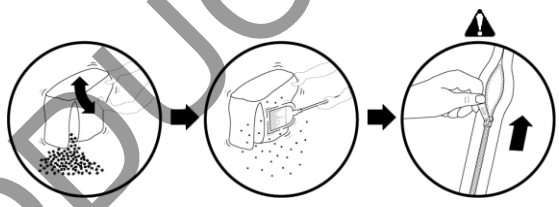

DEBRIS BAG LABEL
ITEM #10

ENGINE CONTROLS AND LABELS

BRIGGS & STRATTON

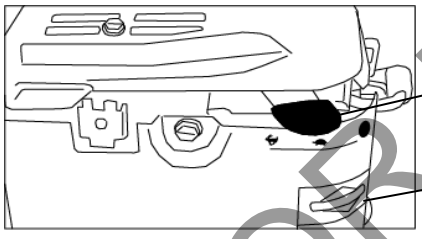

Briggs and Stratton engines have a primer button carburetor rather than choke type carburetor.

NOT FOR REPRODUCTION

PACKING CHECKLIST

Your Billy Goat LB Vacuum is shipped from the factory in one carton, completely assembled except for the upper handle and debris bag.

READ all safety instructions before assembling unit.

TAKE CAUTION when removing the unit from the box, the Handle Assembly is attached by cables and folded over.

PUT OIL IN ENGINE BEFORE STARTING

PARTS BAG & LITERATURE ASSY

Warranty card P/N- 400972, Owner's Manual P/N-901015, General Safety and Warnings Manual P/N-100294, Declaration of Conformity P/N-900782, Literature LB Accessories 900714.

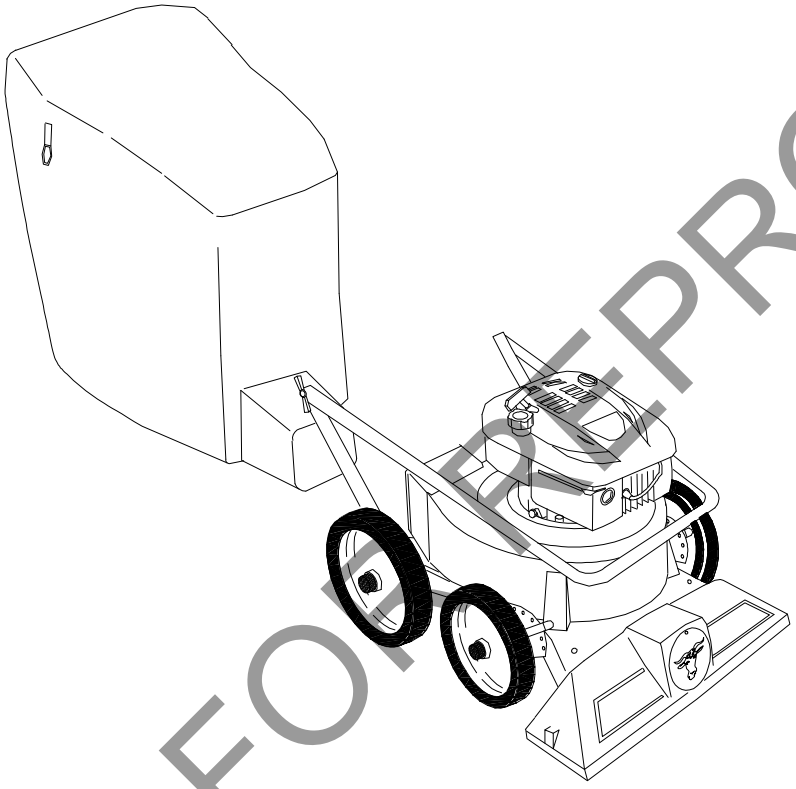

Boxing Parts *Checklist*

- ☐ **Debris Bag P/N-900718**
- ☐ **Literature Assy P/N-901016**
- ☐ **Briggs & Stratton 500 Series**

ASSEMBLY

NOTE: Items in ( ) can be referenced in the Parts Illustration and Parts List on pages 8-9.

Your Billy Goat is shipped from the factory in one carton, completely assembled except for the upper handle and debris bag.

1. **ROTATE** the upper handle into the upward position and securely tighten the knobs. This machine can be stored with handle folded in down position.
2. **UNFOLD** the debris bag (item 10) and fasten the bag neck onto exhaust discharge opening.
3. **ATTACH** bag hanger straps to the loops (item 38), preassembled to upper handle.
4. **CONNECT** spark plug wire.

NOT FOR REPRODUCTION

OPERATION

VACUUMING OPERATION

VACUUM NOZZLE HEIGHT ADJUSTMENT: Nozzle height is raised and lowered by adjusting front wheel height control.

FOR MAXIMUM PICKUP: Adjust nozzle close to debris, but without blocking airflow into the nozzle. *NOTE*: Never bury nozzle into debris.

CLEARING A CLOGGED NOZZLE & EXHAUST: Turn engine off and wait for impeller to stop completely and disconnect spark plug wire. Wearing durable gloves, remove clog. **Danger**, the clog may contain sharp materials. Reconnect spark plug wire.

DEBRIS BAG

Debris bags are normal replaceable wear items.

NOTE: Frequently empty debris to prevent bag overloading with more weight than you can lift.

An optional bag and dust cover is available for use where debris will be vacuumed in dusty conditions (see "Accessories" on page 1). **DO NOT** place bag on or near hot surface, such as engine. Run engine at 1/2 throttle for first 1/2 hour to condition new bag. Your new bag requires a break-in period to condition the pores of the material against premature blockage. The entire bag surface serves as a filter, and must be able to breath for good vacuum performance. Be sure engine has come to a complete stop before removing or emptying bag.

This vacuum is designed for picking up trash, organic material and other similar debris (see "Safety and General Operation" manual)**.**

However, many vacuums are used where dust is mixed with trash. Your unit can intermittently vacuum in dusty areas. Dust is the greatest cause of lost vacuum performance. Following these rules will help maintain your machine's ability to vacuum in dusty conditions:

- Run machine at idle to quarter throttle.
- The debris bag must be cleaned more frequently. A vacuum with a clean, pillow soft bag will have good pickup performance. One with a dirty, tight bag will have poor pickup performance. If dirty, empty debris and vigorously shake bag free of dust.
- Machine or pressure-wash debris bag if normal cleaning does not fully clean bag. Bag should be thoroughly dry before use. Having one or more spare debris bags is a good way to reduce down time while dirty bags are being cleaned.

DO NOT leave debris in bag while in storage.

COMPOST

Vacuumed leaves, grass and other organic material from your own yard can be emptied into a pile or composter to provide enriched soil for later use as fertilizer in gardens and flower beds. *NOTE:* Allow green chips to dry before spreading around living plants.

NOT FOR REPRODUCTION

MAINTENANCE

NOTE: Items in ( ) can be referenced in the Parts Illustration and Parts List on pages 8-9.

PERIODIC MAINTENANCE

Periodic maintenance should be performed at the following intervals:

Maintenance Operation	Every Use (Daily)	Every 5 Hrs (Daily)
Inspect for loose, worn or damaged parts		●
Clean Debris bag	●	
Check bag strap tightness	●	
Engine (See Engine Manual)		
Check for excessive vibration		●

IMPELLER REMOVAL

1. Wait for engine to cool and disconnect spark plug.
2. Drain fuel and oil from engine.
3. Remove bag and remove upper handle.
4. Invert and support machine without placing the weight of the machine on the engine's recoil starter.
5. Remove rear wheels (item 11), and bolt axle bracket (item 48), one each side, closest to middle inlet plate (item 3), washer (item 57) and nut (item 49).
6. Remove intake wrapper assembly (item 2) and middle inlet plate (item 3), eight screws and eight nuts.
7. Remove impeller bolt (item 37) and lock washer (item 36).
8. Lift impeller free of engine.
9. If impeller does not remove easily, obtain a 1" (25.4mm) longer bolt of the same diameter and thread type as the impeller bolt. Thread longer bolt by hand into crankshaft until bolt bottoms. Using a suitable gear or wheel puller against the bolt head and impeller back-plate (near the blades), remove impeller from shaft.
10. Reinstall new impeller, impeller bolt and lock washer in reverse order. Torque impeller bolt to 33-38 ft-lbs (45-52 N.m).

TROUBLESHOOTING

Problem	Possible Cause	Solution
Abnormal vibration	Loose or out of balance impeller or loose engine.	Check impeller and replace if required. Check engine.
Will not vacuum or has poor vacuum performance	Dirty debris bag. Nozzle height set too high or low. Hose kit cap missing. Clogged nozzle or exhaust. Excessive quantity of debris.	Clean debris bag. Shake bag clean or wash. Adjust nozzle height. Check for hose kit cap. Unclog nozzle or exhaust. Allow air to feed with debris.
Engine will not start	Throttle in off position. Out of gasoline. Bad or old gasoline. Sparkplug wire disconnected. Dirty air cleaner.	Check throttle. Connect spark plug wire. Clean or replace air filter. Or contact a qualified service person.
Engine is locked, will not pull over	Debris locked in impeller. Engine problem.	See page 6. Contact an engine service dealer for engine problems.
Nozzle scrapes ground in lowest height setting	Nozzle height out of adjustment.	Adjust nozzle height (See "NOZZLE HEIGHT ADJUSTMENT" for hard surfaces on page 6.)

NOT FOR REPRODUCTION

LB PARTS DRAWING

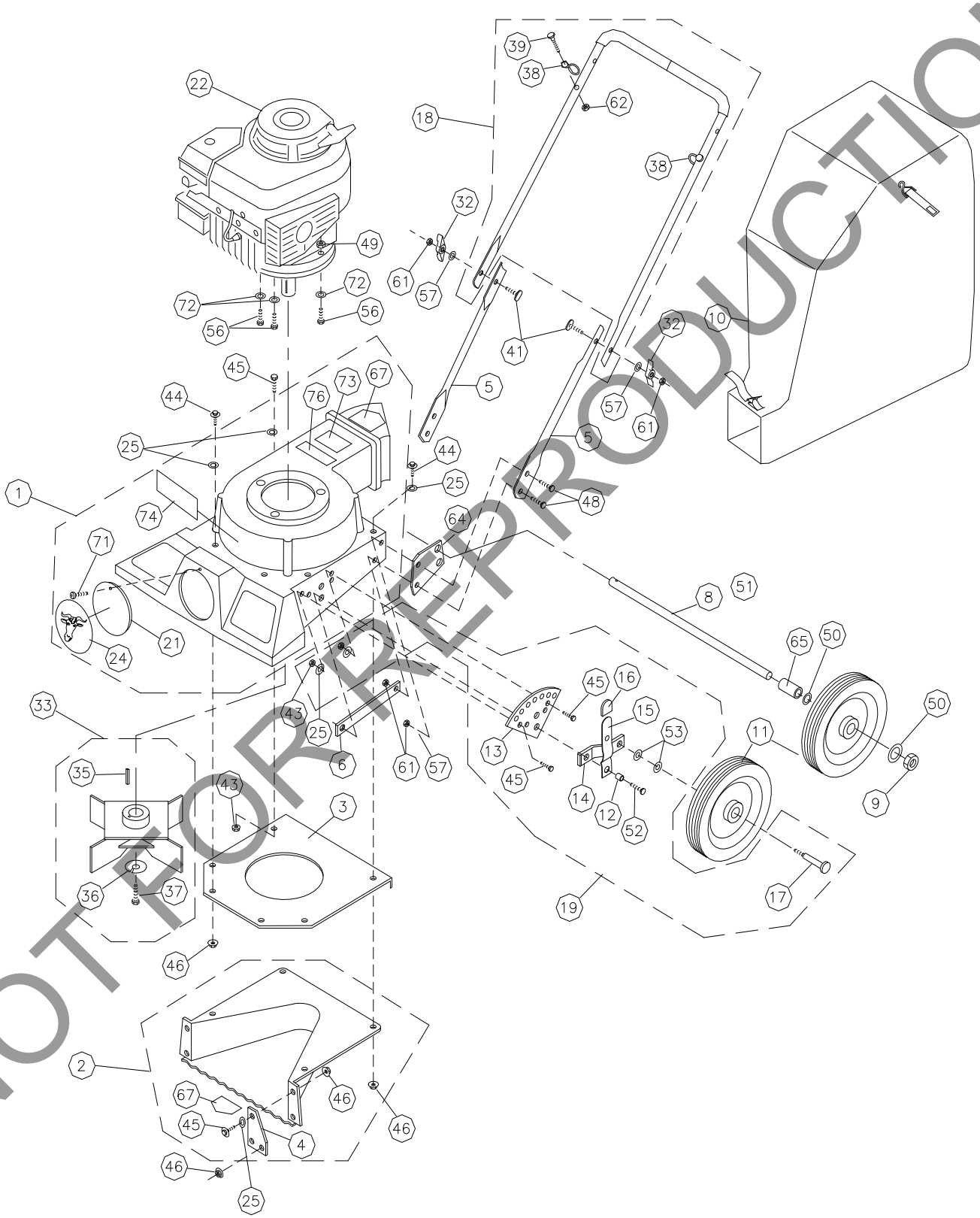

NOT FOR REPRODUCTION

LB PARTS LIST

ITEM NO.	DESCRIPTION	LB352 Part No.	QTY
1	HOUSING ASSY	900590-04	1
2	WRAPPER-INTAKE ASSY	900607-04	1
3	PLATE MIDDLE INLET	900418	1
4	PLATE WRAPPER	900413	2
5	HANDLE LOWER	900483	2
6	BRKT, INTERNAL SUPPORT, LB	900826	2
8	AXLE SHAFT	900818	1
9	NUT PAL 1/2"	840089	2
10	BAG DEBRIS	900719	1
11	WHEEL 8" X 1/2" OC HUB	900157	4
12	SPACER	900384	2
13	PLATE- HT ADJ.	900414	2
14	AXLE ARM- HT. ADJ.	900416	2
15	ARM ASSY - HT ADJ.	900417	2
16	TIP -HT. ADJ.	900459	2
17	BOLT AXLE 1/2" X 1.56 LG	900171	2
18	HANDLE - UPPER ASSY	900777	1
19	HT. ADJ. ASSY	900820	2
20	SPACER FRONT WHEEL	900819	2
21	PLUG	900146-01	1
22	ENGINE BRIGGS 500 SERIES	901012	1
24	LABEL LOGO SMALL FRAME	441152	1
25	WASHER 1/4 SAE	8172007	13
26	SCREWCAP 5/16-16 X 1 1/4	8041029	1
30	WASHER 1/2" FLAT KD WHEEL MTG	900230	4
32	KNOB-FOLDING HANDLE	900456	2
33	IMPELLER ASSY	900421	1
35	KEY-3/16 SQ. X 1 1/4"	9201080	1
36	WASHER LOCK 7/16 S/T MED	8177013	1
37	SCREWCAP 7/16-20 X 1" HCS GR. 8 W/PATCH	510213	1
38	BAG LOOP	800178	2
39	SCREW CAP 1/4-20 X 1 1/4"	8041007	2
41	BOLT CARRIAGE 5/16-18x2 1/4"	900466	2
43	NUT LOCK 1/4 - 20 HEX ZP	8160001	5
44	SCREWCAP 1/4 -20 X 1"	8041006	2
45	SCREWCAP 1/4-20 X 3/4"	8041004	13
46	NUT LOCK WASHER 1/4-20	900453	10
48	SCREWCAP 5/16-18 X 1 1/4"	8041029	4
49	NUT LOCK 5/16-18 HEX ZP	8160002	3
50	WASHER FLAT 1/2 SAE (17/32 X 1 1/16 X 3/32)	8172011	4
52	SCREWCAP 3/8-16 X 1 1/2"	8041052	2
53	WASHER LOCK 3/8 S/T MED	8177012	2
55	WASHER FLAT 3/8 SAE (13/32 X 13/16/ X 1/16)	8172009	2
56	SCREW CAP 5/16-18 X 1 1/4	8041030	3
57	WASHER 5/16 SAE (11/32 X 11/16 X 1/16)	8172008	2
61	NUT LOCK 5/16-18	8160002	5
62	NUT LOCK 1/4-20	8160001	2
64	BRACKET AXLE	900487	2
65	SPACER 1/2 X 5/8	900231	2
67	LABEL DANGER KEEP HANDS AND FEET AWAY	400424	2
71	SCREW SELF-TAPPING 10-24 X 1/2	8123086	1
72	WASHER 5/16 FLAT CUT	8171003	3
73	LABEL FLYING DEBRIS	810736	1
74	LABEL LB BADGING	901016	1
76	LABEL SAFETY PROTECT READ MANUAL	100346	1

NOT FOR REPRODUCTION

CE

en	English	fi	Suomi	lv	Latviešu	ru	Русский
bg	български език	fr	Français	nl	Nederlands	sl	Slovenščina
cs	Čeština	el	Ελληνικά	no	Norsk	sk	Slovák
da	Dansk	hr	Hrvatski	pl	Polski	sv	Svenska
de	Deutsch	hu	Magyar	pt	Português	tr	Türkçe
es	Español	it	Italiano	ro	Română		
et	eesti keel	lt	Lietuvių				

en	*EC* Declaration *of Conformity*	el	Δήλωση συμμόρφωσης ΕΚ	*pl*	*Deklaracja zgodności UE*
bg	*Декларация за съответствие с европейските стандарти*	hu	EU Megfelelőségi nyilatkozat	*pt*	*Declaração de Conformidade à CE*
cs	*ES Prohlášení o shodě*	hr	EC Deklaracija o sukladnosti	*ro*	*Declaraţie de conformitate C.E.*
da	*EC Overensstemmelseserklæring*	it	Dichiarazione di conformità CE	*ru*	*Заявление о соответствии стандартам и нормам ЕС*
de	*EG-Konformitätserklärung*	lt	EB atitikties deklaracija	*sl*	*ES izjava o skladnosti*
es	*Declaración de Conformidad de la CE*	lv	EK Atbilstības deklarācija	*sk*	*Vyhlásenie o zhode*
et	*Eü vastavustunnistus*	nl	E.G, Conformiteitverklaring	*sv*	*EG-försäkran om överensstämmelse*
fi	*EC-vaatimustenmukaisuusvakuutus*	no	CE konformitetserklæring	*tr*	*EC Uygunluk Deklarasyonu*
fr	*Déclaration de conformité CE*				

en	Category	Vacuum	el	Κατηγορία	κενό	pl	Kategoria	Próżnia
bg	Категория	вакуум	hu	Kategória	vákuum	pt	Categoria	vácuo
cs	Kategorie	Vakuové	hr	Kategorija	Vakuum	ro	Categorie	vid
da	Kategori	vakuum	it	Categoria	vuoto	ru	Категория	вакуум
de	Kategorie	Vakuum	lt	Kategorija	Dulkių	sl	Kategorija	vakuumska
es	Categoría	Aspiradora	lv	Kategorija	vakuums	sk	Kategória	vákuové
et	Kategooría	vaakum	nl	Categorie	vacuüm	sv	Kategori	vakuum
fi	Kategoria	tyhjiö	no	Kategori	vacuum	tr	Kategori	Vakum
fr	Catégorie	vide						

en *This is to certify that the products listed in this document meet the requirements of the European Community Law, and can carry the CE mark. These models comply with the following Directives and related Standards.*

bg *Декларацията се издава в удостоверение на това, че изброените продукти съответстват на стандартите на правните норми на Европейския съюз и могат да носят знака CE. Моделите изпълняват директивите и техните стандарти, както следва.*

cs *Tímto stvrzujeme, že výrobky uvedené v tomto dokladu splňují požadavky zákonů Evropského společenství a mohou být označeny značkou CE. Tyto modely splňují následující směrnice a související normy.*

da *Det bekræftes hermed, at de produkter, der er nævnt i dette dokument, opfylder bestemmelserne i EU-lovgivningen og kan bære CE-mærkatet. Disse modeller er i overensstemmelse med følgende direktiver og relaterede standarder:*

de *Hiermit wird bescheinigt, dass die in diesem Dokument aufgeführten Produkte mit den gesetzlichen Bestimmungen der Europäischen Gemeinschaft übereinstimmen und das CE- Zeichen tragen können. Diese Modelle erfüllen die folgenden Richtlinien sowie weitere anzuwendende Normen.*

es *La presente certifica que los productos enumerados en este documento cumplen con los requerimientos de la Legislación de la Comunidad Europea, y que pueden portar la marca CE. Estos modelos cumplen con las siguientes Directrices y Estándares relacionados:*

et *Kinnitame,et eespool nimetatud tooted vastavad Euroopa Ühenduse seadusandluse nõuetele ja kannavad CE-märgistust. Eespool nimetatud mudelid vastavad järgmistele direktiividele ja seotud standardile:*

fi *Vakuutamme, että tässä asiakirjassa luetellut tuotteet täyttävät Euroopan Unionin lainsäädännön asettamat vaatimukset ja voi saada CE-merkinnän. Nämä mallit täyttävät seuraavien direktiivien ja niitä koskevien standardien vaatimukset:*

fr *Nous déclarons par la présente que les produits mentionnés dans le document sont conformes à la législation de la Communauté européenne et peuvent porter le marquage CE. Ces modèles sont conformes aux directives suivantes et aux normes connexes :*

el *Με την παρούσα δήλωση πιστοποιείται ότι τα προϊόντα που αναφέρονται στην παρούσα πληρούν τις απαιτήσεις της Ευρωπαϊκής Κοινοτικής Νομοθεσίας και μπορούν να φέρουν τη σήμανση CE. Τα μοντέλα αυτά συμμορφώνονται με τις ακόλουθες Οδηγίες και τα σχετικά Πρότυπα.*

hu *Ez annak tanúsítására szolgál, hogy e dokumentumban felsorolt termékek megfelelnek az Európai közösségi jog követelményeinek és viselheti a CE jelzést. Ezek a modellek eleget tesznek a következő irányelveknek és vonatkozó szabványoknak.*

hr *Ovo je potvrda da proizvodi koji su navedeni u ovom dokumentu odgovaraju zakonima europske zajednice i da nose CE oznaku. Ovi modeli zadovoljavaju sljedeće direktive i odgovarajuće standarde.*

it *Si certifica che i prodotti elencati nel presente documento soddisfano i requisiti della legislazione della Comunità Europea e possono recare il marchio CE. Questi modelli sono conformi alle seguenti norme e direttive:*

lt *Šiuo patvirtiname kad šiame dokumente paminėti produktai atitinka Europos Bendrijos Įstatymų reikalavimus ir jie gali būti pažymėti CE ženklu. Šie modeliai atitinka sekančias direktyvas ir standartus.*

lv *Ar šo tiek apstiprināts, ka šajā dokumentā uzskaitītie izstrādājumi atbilst Eiropas Kopienas Likuma prasībām un var tikt marķēti ar emblēmu CE. Šie modeļi atbilsts sekojošajām Direktīvām un attiecīgajām Normām.*

nl *Hiermee wordt gecertificeerd dat de producten die in deze lijst staan opgesomd, voldoen aan de wettelijke voorschriften van de Europese Gemeenschap en mogen worden voorzien van de CE markering. Deze modellen voldoen aan de volgende richtlijnen en bijbehorende normen:*

no *Dette sertifiserer at produktene som er nevnt i dette dokumentet oppfyller kravene som stilles av EU, og at de dermed kan CE-merkes. Disse modellene tilfredsstiller følgende direktiver og relaterte standarder:*

pl *Niniejszym zaświadcza się, że produkty wymienione w niniejszym dokumencie spełniają wymogi Prawa Wspólnoty Europejskiej i mogą nosić oznakowanie CE. Modele te spełniają wymogi następujących dyrektyw i powiązanych norm.*

pt *O presente documento certifica que os produtos listados neste documento atendem aos requisitos das Leis da Comunidade Européia e podem levar a marca CE. Esses modelos estão de acordo com as seguintes diretivas e padrões relacionados.*

ro *Prin prezenta se atestă faptul că produsele menţionate în acest document îndeplinesc cerinţele de Drept Comunitar European şi pot purta sigla C.E. Aceste modele sunt în conformitate cu următoarele directive şi standarde asociate.*

ru *Настоящим удостоверяется, что перечисленные в этом документе изделия соответствуют требованиям законов Европейского Союза и могут быть обозначены знаком CE. Эти модели отвечают требованиям следующих директив и соответствующих стандартов.*

sl *To služi kot potrditev, da izdelki, ki so navedeni v tem dokumentu, ustrezajo zahtevam zakonodaje Evropske skupnosti in so lahko opremljeni z oznako CE. Ti modeli so v skladu z naslednjimi direktivami in povezanimi standardi.*

sk *Týmto vyhlasujeme, že výrobky uvedené v tomto dokumente, spĺňajú požiadavky zákonov ES a môžu byť označené značkou CE. Tieto modely vyhovujú nasledujúcim smerniciam príslušným normám.*

sv *Härmed försäkras att produkterna som finns listade i detta dokument uppfyller kraven i Europeiska gemenskapens lagstiftning och kan förses med CE-märket. Modellerna uppfyller följande direktiv och tillhörande normer.*

tr *Bu belgede belirtilen ürünlerin Avrupa Birliği Yasası gereksinimlerini karşılayarak CE işareti taşıyabilmesini onaylamak içindir. Bu modeller aşağıdaki Direktif ve ilgili Standartlarla uyumludur*

NOT FOR REPRODUCTION

en	Directive:	2006/42/EC	hu	Irányelv:	2006/42/EC	pt	Diretiva:	2006/42/EC
bg	Директива:	2006/42/EC	el	Οδηγία:	2006/42/EC	ru	Директива:	2006/42/EC
cs	Směrnice č.	2006/42/EC	hr	Direktiva:	2006/42/EC	ro	Directiva:	2006/42/EC
da	Direktiv:	2006/42/EF	it	Direttiva:	2006/42/EF	sl	Direktiva:	2006/42/EF
de	Richtlinie:	2006/42/EG	lt	Direktyva:	2006/42/EG	sk	Smernica:	2006/42/EG
es	Directriz:	2006/42/EC	lv	Direktīva:	2006/42/EC	sv	Direktiv:	2006/42/EC
et	Direktiiviga:	2006/42/EÜ	nl	Richtlijn:	2006/42/EÜ	tr	Direktif:	2006/42/EÜ
fi	Direktiivi:	2006/42/EC	no	Direktiv:	2006/42/EC			
fr	Directives :	2006/42/CE	pl	Dyrektywy:	2006/42/CE			

en Model	Guaranteed Sound Power Level	Measured Sound Power Level	Sound Pressure Level at Operator's Ear (1)	Engine Net Power	Hand/Arm Vibration (2)	Mass
bg Модел	Гарантирано ниво на звука	Измерено ниво на звука	Налягане на звука, измерено на нивото на ухото на оператора (1)	Мощност на двигателя	Вибрация на длантa и на ръката (2)	Маса
cs Model	Garantovaná hladina akustického výkonu	Změřená hladina akustického výkonu	Hladina akustického tlaku naměřená u ucha obsluhující osoby (1)	Užitečný výkon motoru	Vibrace rukou/paží (2)	Váha
da Model	Garanteret støjniveau	Målt støjniveau	Lydtryksniveau ved brugerens øre (1)	Maskine Netto kraft	Vibration af hånd/arm (2)	Vægt
de Modell	Garantierter Schallleistungspegel	Gemessener Schallleistungspegel	Schalldruckpegel am Ohr der Bedienungsperson (1)	Motornettoleistung	Vibrationen an Hand/Arm (2)	Masse
es Modelo	Nivel garantizado de potencia acústica	Nivel medido de potencia acústica	Nivel de presión acústica en el oído del operador (1)	Potencia neta del motor	Vibración mano / brazo (2)	Masa
et Mudel	Garanteeritud helivõimsuse tase	Mõõdetud helivõimsuse tase	Helirõhu tase kasutaja kõrva juures (1)	Masin puhas töötav	Võkumine käsi / käsivars (2)	Massi
fi Malli	Taattu äänitehotaso	Mitattu äänitehotaso	Äänenpaine taso käyttäjän korvan tasolla (1)	Moottorin nettoteho	Käden/käsivarren tärinä (2)	Paino
fr Modèle	Niveau de bruit garanti	Niveau de bruit mesuré	Niveau sonore au niveau de l'oreille de l'opérateur (1)	Puissance nette du moteur	Vibrations au niveau de la main/du bras (2)	Masse
el Μοντέλο	Εγγυημένη στάθμη ηχητικής ισχύος	Μετρηθείσα στάθμη ηχητικής ισχύος	Στάθμη ηχητικής πίεσης στο αυί του χειριστή (1)	Καθαρή ισχύς κινητήρα	Χειροβραχιονική δόνηση (2)	Μάζα
hu Model	Garantált hangteljesítmény szint	Mért hangteljesítmény szint	Hangnyomás szint a gépkezelő fülénél (1)	Motor hasznos teljesítménye	Kéz/kar vibráció (2)	Tömeg
hr Model	Zajamčena razina snage zvuka	Izmjerena razina snage zvuka	Razina zvučnog tlaka na uhu rukovatelja (1)	Neto snaga motora	Vibracije šake/ruke (2)	Masa
it Modello	Livello acustico garantito	Livello acustico misurato	Livello di pressione acustica all'orecchio dell'operatore (1)	Potenza netta motore	Vibrazioni a mani/braccia (2)	Massa
lt Modelis	Garantuotas triukšmo lygis	Pamatuotas triukšmo lygis	Garso spaudimo lygis įrangos naudotojui (1)	Variklio bendras galingumas	Rankenos vibracija (2)	Masė
lv Modelis	Garantētais skaņas jaudas līmenis	Izmērītais skaņas jaudas līmenis	Skaņas spiediena līmenis pie operatora auss (1)	Dzinēja neto jauda	Rokas/pleca vibrācija (2)	Masa
nl Model	Gegarandeerd geluidsdrukniveau	Gemeten geluidsdrukniveau	Geluidsdrukniveau bij het oor van de gebruiker (1)	Netto motorvermogen	Trilling van hand/arm (2)	Mass
no Modell	Garantert lydstyrkenivå	Målt lydstyrkenivå	Lydtrykk-nivå ved operatørens øre (1)	Motorens netto krefter	Hånd/ arm-vibrasjon (2)	Masse
pl Model	Gwarantowany poziom mocy akustycznej	Zmierzony poziom mocy akustycznej	Poziom ciśnienia akustycznego w uchu operatora (1)	Moc netto silnika	Drgania ręki/ramienia (2)	Masa
pt Modelo	Nível de potência de som garantido	Nível de potência de som medido	Níveis de pressão do som no ouvido do operador (1)	Potência útil do motor	Vibração na mão/braço (2)	Massa
ro Model	Nivel de zgomot garantat	Nivel de zgomot măsurat	Nivel de presiune acustică la urechea operatorului (1)	Putere netă motor	Vibrație mână/braț (2)	Masă
ru Модель	Гарантированный уровень звуковой мощности	Измеренный уровень звуковой мощности	Уровень звукового давления на месте оператора (1)	Полезная мощность двигателя	Интенсивность вибрации на ладоняхруках (2)	Вес
sl Model	Zajamčena raven zvočne moči	Izmerjena raven zvočne moči	Raven zvočnega tlaka pri ušesu uporabnika (1)	Izhodna moč motorja	Tresljaji na rokah (2)	Masa
sk Model	Zaručená hladina akustického výkonu	Nameraná hladina akustického výkonu	Hladina akustického tlaku pôsobiaceho na ucho obsluhy (1)	čisty výkon motora	Ruka/Rameno Vibrácia (2)	Masa
sv Modell	Garanterad ljudeffektnivå	Uppmätt ljudeffektnivå	Ljudtrycksnivå vid operatörens öra (1)	Motoreffekt netto	Hand-/ armvibrationer (2)	Massa
tr Model	Garantili Ses Gücü Seviyesi	Ölçülen Ses Gücü Seviyesi	Operatörün Kulağındaki Ses Basınç Seviyesi (1)	Makine Net Gücü	El/Kol Titreşimi (2)	Ağırlık
LB352	98 dB(A)	97 dB(A)	77 dB(A)	2.6 kW	5.17 m/s2	25.85 kg

(1) ISO 5395-1:2013 F.7 (EN 4871:1996)
(2) ISO 5395-1:2013 G.8 (EN 12096:1997, D.1)

NOT FOR REPRODUCTION

en	Manufacturing Place / Keeper of Documentation	*el*	*Τόπος κατασκευής / Υπεύθυνος τήρησης αρχείων τεκμηρίωσης*	pl	Miejsce produkcji / Osoba odpowiedzialna za przechowywanie dokumentów
bg	Място на производство / Архивар	*hu*	*Gyártás helye / A dokumentáció őrzője*	pt	Local de Fabrico / Responsável pela Documentação
cs	Místo výroby / Držitel dokumentace	*hr*	*Mjesto proizvodnje / Čuvar dokumentacije*	ro	Loc de fabricaţie / Păstrător documentaţie
da	Fremstillingssted / Indehaver af dokumentationen	*it*	*Sede di produzione / Archiviatore di documentazione*	ru	Место производства / Владелец документации
de	Herstellungsort / Verantwortlicher für die Dokumentation	*lt*	*Pagaminimo vieta / Dokumentacijos turėtojas*	sl	Kraj izdelave / Hranitelj dokumentacije
es	Lugar de manufactura / Guardián de documentación	*lv*	*Ražošanas vieta / Dokumentācijas glabātājs*	sk	Miesto výroby / Dokumentácia majiteľa
et	Valmistamiskoht / Dokumentatsiooni hoidja	*nl*	*Productieplaats / Documentatiebeheerder*	sv	Tillverkningsplats / Dokumentförvaring
fi	Valmistuspaikka / Asiakirjojen haltija	no	Produksjonssted / Dokumentasjonsholder	tr	Üretim Yeri / Doküman Sorumlusu
fr	Lieu de fabrication / Personne chargée de conserver la documentation				

1803 S.W. Jefferson
Lees Summit, MO 64063-0308 USA

Jeroen Engelen
Schepersweg 4a 6049CV
Herten, NL

10/05/2015

Ted Melin
Engineering Manager

NOT FOR REPRODUCTION