2009
2010
2011
2012
2013
2014
2015
2016
2017
2018
2019
2020
2019
2018
2017
2016
2015
2014
2013
2012
2011
2010
2009

Stockman

Hydrostatic Drive

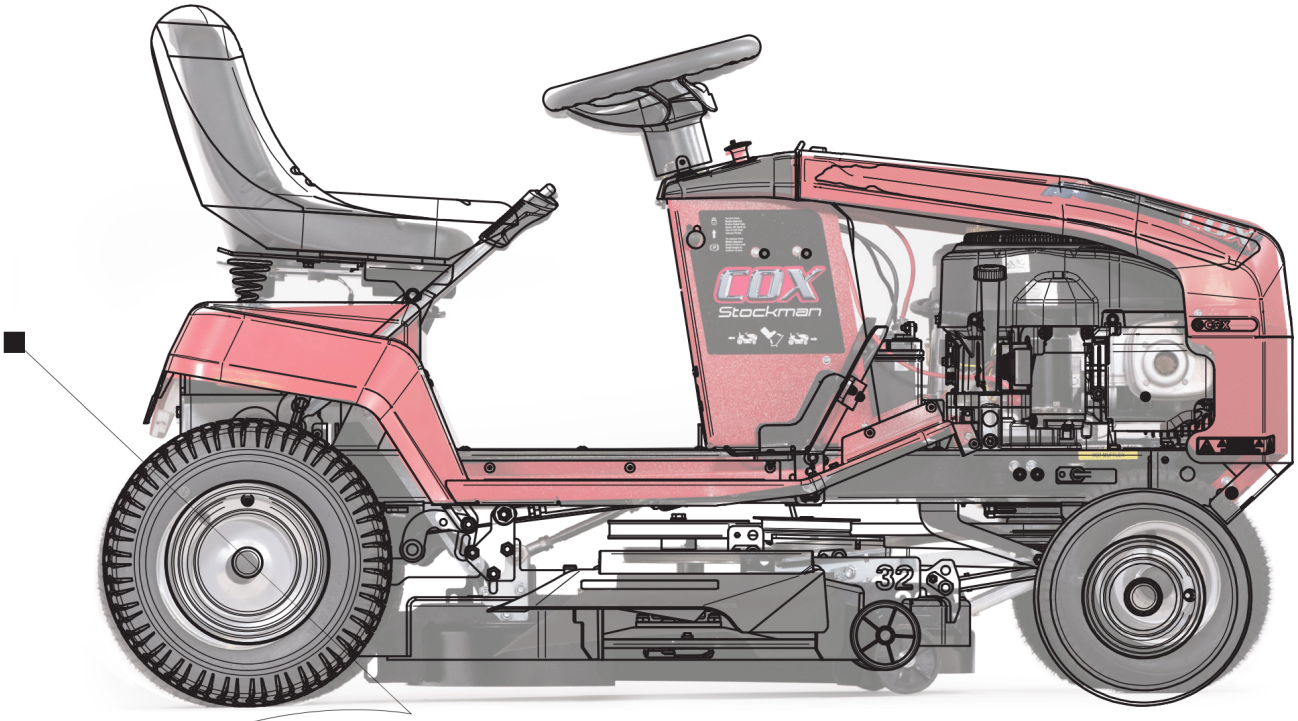

RIDE-ON MOWER
OWNER/OPERATORS MANUAL

STOCKMAN, STOCKMAN PLUS & STOCKMAN PRO

MODEL A21420F

READ THIS MANUAL BEFORE OPERATING MACHINE
DEATH, PERSONAL INJURY AND/OR PROPERTY DAMAGE MAY OCCUR UNLESS INSTRUCTIONS IN THIS MANUAL ARE FOLLOWED.

NOTE: Bring this Manual when Service & or Warranty work is required.

REGISTER YOUR WARRANTY ONLINE

Use the QR code or go to http://www.coxmowers.com.au/warranty-registration

INTRODUCTION

THANK YOU, for purchasing a COX STOCKMAN, Ride-on Mower.
Proudly Designed & Engineered by Cox Industries (Australia) Pty. Ltd..

READ THIS MANUAL carefully to learn how to operate safely and maintain your Ride-on Mower effectively.
Failure to follow Safety, Operating or Maintenance instructions in this manual could result in Death, Personal Injury or Equipment Damage.

THIS MANUAL IS PART OF YOUR RIDE-ON MOWER and should be supplied with this Ride-on Mower if you lend or sell this Ride-on Mower. This should also apply to the Engine Owners Manual.

CONVENTIONS
Measurements in this manual are given in metric units unless otherwise stated.
Right-hand and Left- hand, are determined by facing the direction of forward travel.
Direction of rotation is determined by looking into the components in motion parallel to the axis of rotation.

COMPLETE THE OWNERS INFORMATION AS PER BELOW.
Accurately recording these numbers will assist your Cox Dealer when ordering spare parts or help in tracing the Ride-on Mower if it should be stolen. Store this manual in a secure place remote from the Ride-on Mower.
ENSURE YOU UNDERSTAND THE WARRANTY POLICY with regard to the responsibilities of operation, maintenance and ownership of this COX STOCKMAN Ride-on Mower.

THE INTENDED USE OF THIS RIDE-ON MOWER is for customary mowing of Landscaped Parks, Gardens, Grounds, Sporting Fields, Road Verges, Golf Course Fairways, Orchards, Plantations, and Vineyards.
Strict adherence to the conditions of Operation, Maintenance, Service & Repair as specified by the manufacturer constitute essential elements for The Intended Use.
Use in any other way not specifically approved directly in writing by the manufacturer is considered as contrary to the intended use and will increase the risk of personal injury or property damage and is therefore considered as misuse for which the manufacturer accepts no responsibility as these increased risks must be accepted solely by the user.

Do Not Modify the Machine without direct specific approval by the manufacturer as modification is considered contrary to the intended use and will increase the risk of personal injury or property damage and is therefore considered as misuse for which the manufacturer accepts no responsibility as these increased risks must be accepted solely by the user.

OPERATION, MAINTENANCE, SERVICE AND REPAIR of this Ride-on Mower should be performed only by persons familiar with its characteristics and acquainted with the relevant Safety, Operating and maintenance instructions in this manual, as well as all relevant Statutory Regulations in force at the place and time.
When your Ride-on Mower needs service or repair please remember your **Cox Dealer is an industry trained professional** who is supported by the Cox Industries (Aust) Pty Ltd and is dedicated to your satisfaction.

THE INFORMATION INCLUDED IN THIS MANUAL was considered correct at the time of approval for printing. Cox Industries (Australia) Pty Ltd reserves the right to change specifications or designs without notice or obligation.

OWNERS INFORMATION

MODEL NO. _____ **DATE OF PURCHASE:** _____/____/____

PRODUCT CODE NO. _____

SERIAL NO. _____
Located on Label inside Console

ENGINE NOS. _____
Located on Engine (Model, Type & Code) refer Engine Owners Manual

OWNERS NAME: _____

ADDRESS: _____

TOWN/CITY: _____ **STATE:** _____

AUTHORISED DEALER/ DISTRIBUTOR: _____

ADDRESS: _____

TOWN/CITY: _____ **STATE:** _____

COX INDUSTRIES MOWER WARRANTY POLICY

DEFINITIONS:
"Commercial Use" means all uses other than Domestic use, including any use that is income producing, rental, or is in relation to use in schools, by government departments or charity operators.
"Cox Industries" means Cox Industries (Australia) Pty Ltd ACN 050 991 038.
"Dealer" means an authorised Cox Industries dealer a list of which can be found on our website: www.coxmowers.com.au
"Domestic Use" means use for a personal, residential or household (property) purpose.
"Mower" means any ride-on mower manufactured by Cox Industries.
"Parts" means all parts that can be found in a Mower.
"Warranty Period" means:
for Domestic Use, a period of five (5) years (*conditions apply) or standard (2) years; or
for Commercial Use, a period of one (1) year (*conditions apply) or standard (6) months,
from the original date of purchase.

NEW MOWER:
Our goods come with guarantees that cannot be excluded under the Australian Consumer Law. You are entitled to a replacement or refund for a major failure and compensation for any other reasonably foreseeable loss or damage. You are also entitled to have the goods repaired or replaced if the goods fail to be of acceptable quality and the failure does not amount to a major failure.
Nothing in this Warranty purports to modify or exclude the conditions, warranties and undertakings, and other legal rights, under the Australian Consumer Law. This Warranty gives you additional protection for your Mower, and identifies a preferred approach to resolving warranty claims which will be quickest and simplest for all parties, subject to the exclusions, terms and conditions below.

WARRANTY PERIOD:
Cox Industries warrants in respect of each new Mower sold that, subject to the exclusions below, for the Warranty Period Cox Industries or a Dealer will repair or replace free of charge any Parts found to be defective in materials or workmanship under normal use and operating conditions. Other than for major failure, it is at Cox Industries sole discretion as to whether the Mower or Part is repaired or replaced.
The engine, battery, elect clutch/park brake and transaxle are warranted by their manufacturers and are not covered by the Cox Domestic Use five (5) year and Cox Commercial Use one (1) year warranty.

***For our COX Domestic Use five (5) year and Cox Commercial Use one (1) year warranty to remain valid, we require the following:-**

1. **The COX online warranty registration form is completed within fourteen days from date of purchase.**
2. **The mower receives an initial service by an authorised COX dealer at around 5 hours, or 1 month from date of purchase. At every 100 hours or annually, which ever is sooner, the mower is to be serviced by an authorised COX dealer and the service times/dates are recorded by the COX servicing Dealer in the service log included within the COX website.**
3. **(Periodically additional maintenance is required to be carried out by a COX servicing dealer or the Owner/Operators as per Owner/Operators Manual Maintenance Schedule).**
4. **For clarity, general wear and tear and user neglect are not covered under our warranty provisions.**

MOWER PARTS INSTALLED DURING NEW MOWER WARRANTY PERIOD:
Warranty coverage for Parts installed during the new Mower Warranty Period shall consist of the remainder of the new mower Warranty Period or ninety (90) days, which ever is greater, provided the installation is performed by an authorised Dealer.

TO CLAIM THE WARRANTY:
To make a claim under this Warranty, please bring or send the Mower to an authorised Dealer with a copy of your proof of purchase of the Mower. A claim under this Warranty is not formally made unless and until that proof of purchase is provided. This does not detract from your statutory rights.

WARRANTY REGISTRATION:
The online warranty registration form must be completed within 14 days of purchase. It is the purchasers responsibility to ensure this is carried out.
This Warranty is transferable to a subsequent owner of a Mower, in the event of the sale of that product, provided that Cox Industries is informed in writing within a reasonable time of the sale of the subsequent owner's name and contact details, such notice to be provided to Cox Industries. The notice should identify the name of the previous owner of the Mower, place and date of purchase, model, make and serial number of the Mower. The effective transfer of this Warranty does not otherwise alter the terms of this Warranty in any way.

WARRANTY EXCLUSIONS:
This Warranty does not cover:
1. the costs of rental of another machine or related equipment while repairs are in progress;
2. telephone, facsimile or other related communication expenses.
3. transportation and insurance charges during transportation of failed Mower or any part thereof;
4. the labour, parts, mechanical adjustments or lubricant costs which, in the judgement of Cox Industries or their Dealer, should have been made as standard maintenance according to the Cox Industries maintenance schedule;
5. the replacement of or service costs relating to replacing and maintaining consumable parts which have ceased working through normal wear and tear such as, but not limited to, normal maintenance parts such as mower discs, blades, bolts and nuts, vee belts, bearings, chains, clutch cones and friction discs;
6. any damage or defect caused by alteration, modification, fitment of a non-genuine part or attachment not approved by Cox Industries or repair, modification or work carried out on the Mower other than by a Dealer;
7. any defect caused by misuse, negligence, accidents or failure to carry out proper maintenance procedures;
8. damage caused by continued operation of the machine after it is known to be defective;
9. any other expenses incurred by the consumer in making the warranty claim;
10. damage caused by incorrect or improper operation (including racing or similar activities), maintenance or not following the instructions or maintenance requirements of the Mower in accordance with the instructions provided with the Mower;
11. damage caused by failure to clean or improper cleaning of the product;
12. damage caused by adverse external conditions such as thunderstorm activity, acts of God, acts of terrorism, damage caused by vermin, or any other act or circumstance beyond Cox Industries' control; or
13. Damage caused by exposure to excessive heat, moisture or dampness, or exposure to abnormally corrosive conditions.

For the avoidance of any doubt, any and all warranties or conditions which are not guaranteed under the Australian Consumer Law or the Australian Competition and Consumer Regulations 2010 and which are not expressly included in this Warranty as additional warranties or conditions are excluded.
To the extent applicable by law, Cox Industries will not accept liability for costs of labour, postage, cartage or delivery to replace faulty materials or parts, or for any loss, damage or accident directly, indirectly, or consequently suffered by the purchaser, operator or any other person or property as a result of such faults whether due to defective materials or workmanship or otherwise.

Due to Cox Industries on-going commitment to product improvement, we reserve the right to change at any time, product specifications, configurations and company policies.

The following images depict and describe safety symbols that may appear on our mowers. Please read, understand, and follow all the safety instructions before attempting to assemble or operate this product.

SYMBOL	
	**Read the Owner/Operator Manual(s) -** Read, understand and follow all the safety instructions noted in the manual(s) before attempting to operate this product. Know the controls and how to stop the engine quickly in an emergency.
	**Warning -** Never carry passengers. Never carry children, even with the blades turned off.
	**Operator Awareness -** Always look down and behind before and while backing to avoid a back-over accident. Allow only responsible adults who are familiar with the instructions in this manual, to operate the machine.
	**Warning (Rotating Blades) -** Do not place hands or feet near rotating parts or under the cutting deck. Contact with the blade(s) can cause serious personal injury.
	**Warning -** Remove spark plug lead and ignition key. Read instructions before servicing or performing any maintenance.
	**Bystanders -** Keep bystanders, helpers, children and pets at least 25 metres from the machine while it is in operation with a compliant safety deflector.
	**Warning (Slope Operation) -** Do not use/mow in either direction on slopes of more than 15 degrees (1 in 3.75 or 27%). Exercise extreme caution on slopes. There is no such thing as a safe slope.
	**Warning (Hot Surface) -** Engine parts especially the muffler, become extremely hot during operation. Allow engine and muffler to cool before touching.
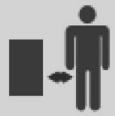	**Warning -** Keep bystanders at a safe distance from the machine.
	**Warning -** Turn off engine and remove ignition key before refueling the machine.
	**Caution -** Avoid injury! Engine exhaust fumes contain carbon monoxide and can cause serious illness or death.
	**Caution -** Do not run an engine in an enclosed area such as a garage, even with the doors and windows open.



Never mow while barefoot or wearing open sandals or thongs. Wear long trousers and heavy shoes. Always wear suitable eye & ear protection when operating a mower.



SAFETY INSTRUCTIONS

Training:-

Read, understand and follow all instructions in the Ride-on Mower and Engine Owner's/ Operator's Manuals as well as all Machine Safety Signs.

Keep up to date with and follow all relevant statuary regulations in force at the place and time with regard to ownership, transport, operation, maintenance, service, and repair, disposal or sale of this machine.

Know the controls and the proper use of the Equipment as well as how to stop the Mowing Attachment, Machine Travel, and the Engine in an emergency.

All operators or users should seek and obtain professional and practical instruction.
Such instruction should emphasise:
The need for concentration when working with ride-on machines.
Control of a ride-on machine sliding on a slope will not be regained by application of the brake.
The main reasons for loss of control are:

1. Insufficient wheel grip;
2. Being driven to fast;
3. Inadequate braking;
4. The type of machine is unsuitable for the task;
5. Lack of awareness of the effect of ground conditions, especially slopes;
6. Incorrect hitching and load distribution.

A mower operator should be in good physical and mental health and not under the influence of alcohol or any drug which might impair vision, co-ordination or judgment.

Never allow children or people unfamiliar with these instructions to operate the Ride-on Mower.
Never carry passengers.
Never mow while people, especially children, or unrestrained animals are nearby.

Watch out for traffic when crossing or operating the mower near roadways.

While operating, always wear substantial footwear (not open sandals) and long trousers.

Keep in mind that the operator or user is responsible for accidents or hazards occurring to other people or their property caused by this machine. Do not lend or sell the mower, without the Owners/Operators Manual.

Preparation:-

Thoroughly inspect the area where the equipment is to be used and clear the area to be mowed of loose objects such as sticks, stones, bones, wire, toys, debris, etc., which could be picked up and thrown by the blades.
Warning fire hazard- Any metal part of the mower (such as blades, cutter disc etc.) can create sparks on impact with foreign objects.

WARNING –
Petrol is highly flammable:

1. Store fuel in containers specifically designed for this purpose;
2. Refuel outdoors only; Do not smoke while refuelling;
3. Check for fuel leaks while refueling, before and while using the mower. If a fuel leak is found, do not start or run the engine until the fuel leak is fixed and spilled fuel is wiped away.
4. Add fuel before starting the engine;
5. Never remove the cap of the fuel tank or add petrol while the engine is running or when the engine is hot; Remove fuel cap slowly to relieve any tank pressure.
6. If petrol is spilled, do not attempt to start the engine but move the machine away from the area of spillage and avoid creating any source of ignition until petrol vapours have dissipated;
7. Replace all fuel tank caps and container caps securely.

Replace worn or faulty Mufflers.

Before using, always visually inspect to see that the cutter assembly, blades, and blade bolts are not worn or damaged. Replace worn or damaged blades and bolts in sets to preserve balance. Take care rotating one blade by hand as this can cause other blades to rotate.

Travel on grass slopes requires particular care.

To guard against overturning:

1. Do not stop or start suddenly when going up or downhill. Always start or stop slowly on slopes;
2. Engage hydrostatic drive slowly; Always keep hydrostatic drive operating, especially when travelling downhill;
3. Reduce speed on slopes and in sharp turns to prevent overturning or loss of control.
4. Stay alert for humps and hollows and other hidden hazards;
5. Never mow across the face of the slope.

Do not mow on slopes when grass is wet.

Use care when pulling loads or using heavy equipment:

1. Use only approved hitch points;
2. Limit loads to those you can safely control; Do not turn sharply;
3. Use care when reversing;

When using the mowing attachment, never direct discharge of material towards bystanders nor allow anyone else near the machine while it is operating. Stop the blades rotating before crossing surfaces other than grass.

Keep safety devices (guards and switches) in place and in working order. Never operate the machine with defective guards, or without all safety devices in place and operating correctly.

Do not change the engine governor settings or over speed the engine as excessive engine speed can increase the risk of personal injury. Excessive speed also shortens mower life.

Before leaving the operators position:

1. Disengage the power take off clutch and secure mowing attachment.
2. Return drive pedal to neutral position and set the parking brake in the locked position.
3. Stop the engine and remove the key.

Disengage drive to mowing attachments and stop engine before refuelling, when transporting, emptying the catcher, or not in use.

Disengage drive to attachments, stop engine, apply park brake and remove the ignition key:

1. Before leaving the machine unattended;
2. Before clearing blockages or unclogging the chute;
3. After striking a foreign object. (Inspect the machine for damage and make repairs before restarting or operating the damaged equipment);
4. If the machine starts to vibrate abnormally. (Check immediately).

Disengage drive to attachments, stop engine, apply park brake, remove the ignition key, and disconnect the spark plug wires and battery positive lead before working on, maintaining, or servicing the machine.
This also applies for the following activities-

1. Before clearing blockages or unclogging the chute;
2. Before replacing the blades, or adjusting the tension of the blade bolts;
3. Before placing any tools or any part of your person under the mowing attachment.

Turn the fuel off using the fuel shut off valve at the conclusion of operation.

Store the mower in a well-ventilated room away from naked flames such as may be found in hot water heaters.

Ensure any replacement parts used comply with the original manufacture's recommendations and specifications.

Maintenance and Storage

Keep all nuts, bolts and screws tight to ensure the equipment is in safe working order.

Replace all worn or damaged parts for safety.

Reduce the fire hazard, by keeping the engine, muffler, hydrostatic transaxle, battery compartment, and petrol storage area clear of grass, leaves, or excessive oil and grease. Ensure additional attention is directed at these parts when mowing in taller and dry grass conditions.

Also ensure the mowing attachment drive belt can not come into contact with grass, sticks, and leaves built up on the top surface of the mowing attachment. Remove debris to ensure the maximum life of the belt and reduced fire hazard.

Warning fire hazard: When you have finished mowing never leave mower unattended in dry grass. Hot mufflers can start fires.

Allow the engine to cool before storing the Ride-on Mower in any enclosure.

Never store the machine with petrol in the tank inside a building where fumes can reach an open flame or spark. If the fuel tank has to be drained this should be done out outdoors.

When the machine is to be parked, stored or left unattended raise the mowing attachment and secure it in the full up position.

When transporting the mower (e.g. trailer) always ensure the mowing attachment is fully lowered to protect the cutter suspension system from fatigue.

PRE-DELIVERY INSTRUCTIONS

INTRODUCTION:
The purpose of this procedure is to ensure the Dealer/Distributor has assembled & made the necessary checks, & adjustments, before the mower is operational, and instructed the owner in its safe operation & maintenance. This procedure begins upon receiving the crated mower and is finalised once the mower has been either sold or leaves the Dealer/ Distributors premises. This is the minimum amount of work required, however it should not be limited to only the areas detailed in this procedure.

RESPONSIBILITY:
It is the responsibility of the Dealer/ Distributors to ensure that before a mower is delivered to a customer, it is in perfect operational condition.

CHECK OPERATION OF SAFETY SWITCHES:

STARTING

Clutch/Brake switch
With PTO (power take off) switch in disengaged position (down/off) attempt to start engine without the clutch/brake pedal depressed. **Engine should not start.**

PTO switch
Sit on seat with the clutch/brake pedal fully depressed and PTO switch engaged (On), attempt to start engine.
Engine should not start.

Key Switch
With PTO switch in down (disengaged/ off) position & clutch/brake pedal fully depressed turn key switch to start position.
Engine should start.

STOPPING

Seat switch
Sit on seat and start engine, engage cutter, (manual or electric control) and lift weight from seat.
Engine should stop.

Clutch/Brake switch
Sit on seat and start engine depress clutch/ brake pedal and apply park brake, lift weight from seat.
Engine should continue to run.

Sit on seat with engine running and park brake off, clutch/brake pedal not depressed and lift weight from seat.
Engine should stop.

Key Switch
Sit on seat and start engine, turn key switch to stop position.
Engine should stop.

CHECK TYRE PRESSURES & FLUID LEVELS:

TYRES
Before operation ensure that tyre pressures are equal on both sides. Uneven pressure can give an uneven finish when mowing and may cause damage to tyres and/or tubes.
The recommended pressure is:
Front 140kPa (20 P.S.I.).
Base model - Rear 140kPa (20 P.S.I.)
Plus & Pro models - Rear 103kPa (15 P.S.I.)

BATTERY
This machine is fitted with a maintenance free battery.

ENGINE OIL
Before operation ensure that engine oil level is to the full mark on the dipstick. (Refer engine owners manual for procedure & if some oil needs to be added refer Engine owners Manual for Correct Grade).

FUEL
Ethanol free unleaded fuel is recommended by all manufacturers of engines fitted to Cox products. Ensure the fuel tap at the bottom left front side of fuel tank is turned to the on position before attempting to start engine.

OPERATING INSTRUCTIONS

IMPORTANT

Before operating mower ensure pre - delivery instructions have been followed and completed and all safety instructions read and understood.

BLADE WARNING

Do not use mowing attachment with broken or bent blades, damaged or worn bolts and nuts or damaged cutter disc, otherwise damage and premature wear will result from vibration. Replace blades, bolts and nuts only in pairs to maintain correct balance. Recommended blade nut torque is 36-40Nm. Do not over tighten.



WARNING



DO NOT OPERATE WITHOUT MOWING ATTACHMENT DEFLECTOR FITTED & DOWN.

Keep both feet and hands clear of the mowing attachment at all times while attempting to start or operate the machine.

Reference to left or right hand side of machine is determined by sitting in the operating position on the machine. Mount and dismount only from left hand side of machine.

Ensure machine has clutch/brake pedal fully depressed or parking brake engaged when attempting to start engine.

NOTE
Use slower ground speed for traveling up and down slopes, turning, or mowing heavy growth. Do not use on slopes of more than 15 degrees (1 in 3.75 or 27%).
There is no such thing as a safe slope
Take care when reversing, always look in the direction of intended travel before changing direction.

OPERATING INSTRUCTIONS cont.

The Instruments, the Controls and their functions are as follows;

Key Switch-
Used to start and stop engine. Insert key, turn key all the way right to start (3rd) position to start engine. When key is released from start (3rd) position it will return to on | (2nd) position. Turn key all the way left to off O (1st) position to stop engine. Remove key from off O (1st) position to lock ignition switch.

PTO Switch-
Used to activate the electromagnetic clutch/brake to start (engage) and stop (disengage and brake) mowing attachment blades and allow starting of engine with mowing attachment blades disengaged from engine. With engine running at fast speed pull KNOB up to (ON) position to start (engage) mowing attachment blades. Push knob down to (OFF) position to stop (disengage and brake) mowing attachment blades.

Seat Switch-
Used to stop engine if operator is not on the seat (switch not depressed) & cutter engagement PTO switch is engaged (on) or the park brake switch is not depressed (park brake not locked on).

Engine Speed/Choke Control Lever-
Used to regulate engine speed and cutter speed also to engage/regulate/disengage the engine choke to assist in starting a cold engine. Push LEVER fully forward to engage the engine choke fully. Pull LEVER back so front edge of LEVER is in line with the fast (rabbit) symbol on dash decal to disengage choke fully.
Pull LEVER back for slow engine and cutter speed and push LEVER forward to fast symbol on dash decal for fast engine and cutter speed.

Engine Speed Lever & Separate Choke Control- Some models are fitted with separate controls for engine speed and choke, rather than a combination control. With this setup the engine speed is still regulated in the same fashion. However the choke is only engaged by pulling separate pull knob out from the dash. The choke should only be used when starting the engine, as per the engine owner's manual. After the engine is started, the choke should be disengaged by fully pushing the pull knob back in towards the dash.

Clutch/Brake Pedal & Park Brake Switch-
Used to disengage drive to the transaxle and apply the park brake. Used to allow engagement of park brake in locked (on) position. Used to allow starting of engine. Used to release park brake from locked (on) position.
Depress PEDAL to apply brake. Depress PEDAL to allow raising of park brake knob to locked (on) position. Depress PEDAL to allow starting of engine. Depress PEDAL to release park brake from locked (on) position.
In emergencies the brake can be used to slow and stop the mower.
Under normal circumstances the drive pedal should be used to slow the mower.

Park Brake Knob-
Used to lift the park brake rod and engage with the clutch/brake linkage to secure the brake into the locked (on) position.
Used to allow starting of the engine if the mowing attachment is stoped (PTO clutch/brake knob is pushed down) without the operator depressing clutch/brake pedal or being on the operators seat.
Used to allow the operator to leave the operating position with the engine running if the park brake is in the locked (on) position and the mowing attachment is also stoped (PTO clutch/brake knob is pushed down). Depress brake pedal fully, then lift the park brake KNOB into the locked (on) position and release the brake pedal, leaving the KNOB in the locked (on) position. Depress the clutch/brake pedal to release the park brake and let it return to the off position.

Hourmeter-
Used to indicate the number of hours the engine has operated.

Seat Adjustment - For models without seat slides, loosen four seat mounting bolts and adjust seat into desired position in slots and re-tighten bolts. For seat sliding models, lift the control rod located under the right side seat squab and slide seat forward or backwards as desired.

LED Lights-Plus & Pro models only
Turn on/off using switch on dash.

Automatic Locking Differential-
For models fitted with a Tuff Torq Auto Locking Differential, the units differential will automatically lock when sustained loose traction occurs.

Drive Pedal-
Used to control an infinitely variable ground speed between zero and maximum in forward or reverse. Also to select neutral. With engine running and clutch/brake pedal released push down on front of drive pedal to travel forward, push down on back of drive pedal to travel in reverse. When pressure is released from front or back of pedal it will return to neutral position.

Oil Level Dipstick-
Used to indicate oil level in engine when engine is not running. (Refer to engine owners manual for instructions on checking engine oil level).

Cutting Height Adjustment Lever-
Used to change the mowing attachment cutting height. To alter cutting height, lift lever slightly and depress button, move lever up to raise or down to lower the mowing attachment cut height, stop at desired cutting height and release button to lock at 1 of 10 height positions.

Transaxle Pump By-Pass Lever-
Used to disengage the transaxle to allow the mower to be pushed easily.

Stockman Only: Transaxle Pump By-Pass Lever is located in the wheel well on the right hand side of the chassis. Move lever in for normal operation or move lever out for free wheel.



Stockman Plus & Pro Only: Transaxle Pump By-Pass Lever is located at the front of the transaxle and near the middle of the chassis. Move lever to back for normal operation or move lever forward for free wheel.



Fuel Tap-
Used to shut off the fuel line to stop fuel flow to the engine when the tractor is transported or not in operation to reduce the likelihood of fuel leakage. Turn the KNOB clockwise ¼ of a turn from the on position to the off position to shut off the fuel line to stop fuel flowing to the engine. Turn KNOB anticlockwise ¼ of a turn from the off position to the on position to allow fuel to flow to the engine.

Fuel Cap Vent Valve-
The control knob on the fuel cap should be in the ON position to run the mower. The vent can be in the OFF position to prevent fuel vapours during short storage. Fuel should be drained for long storage periods

TO OPERATE

BEFORE STARTING/STOPPING:
See Engine Maintenance/Instruction Sheet.
Check engine oil level, check fuel level, turn fuel tap on.

STARTING ENGINE
Cold Engine: To start engine, place speed control lever into choke position, ensure PTO switch is in the "off" position, park brake locked or clutch/brake pedal fully depressed, insert key in key switch, turn key all the way right to start (3rd) position, release key when engine has started.
Note: More than 15 seconds of continuous cranking can damage the starter motor. Short starting cycles give best starter motor life. Allow starter motor to cool for 2 minutes before attempting to restart engine. After engine starts gradually move speed control lever, out of choke position to obtain desired engine speed.
Alternatively move engine speed control to full speed, and engage choke (separate controls)

Hot engine:
To start engine, place speed control slightly past slow position, ensure PTO switch is in the "off" position, park brake locked or clutch/brake pedal fully depressed, insert key in key switch, turn key all the way right to start (3rd) position, release key when engine has started. Move speed control lever to obtain desired engine speed.

STOPPING ENGINE
When stopping engine, ensure PTO switch is in the off position, return speed control to slow/idle position, lock park brake, turn key switch to the "off" (1st) position.

DRIVING

To Travel Machine Forward Or Reverse-
With engine running set speed control lever to obtain desired engine speed, ¾ to full speed for the best mowing finish and for engine and transaxle cooling. Release park brake, let the clutch/brake pedal all the way out, apply downward pressure on front of drive pedal to travel forward, or apply downward pressure on rear of drive pedal to travel in reverse. It is not necessary to apply foot brake before changing from forward to reverse or reverse to forward. The amount of pedal travel is used to control the ground speed, small downward travel will give a slow ground speed, full downward travel will give a fast ground speed.

NOTE: Use slower ground speed for traveling up and down slopes, turning, or mowing heavy growth.

Do not use on slopes of more than 15 degrees (1 in 3.75 or 27%).

There is no such thing as a safe slope.

Take care when reversing, always look in the direction of intended travel before changing direction.

To Stop Machine Travel -
Ease drive pedal into neutral position, then apply the park brake.

Transporting Machine -
(trailers, trucks or utilities)

- Tie down machine at 2 points minimum.
- Lower deck to lowest cut height to prevent the linkages from stretching.
- Apply park brake.





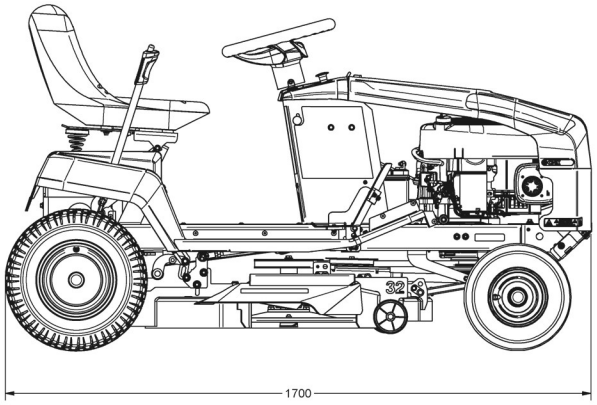

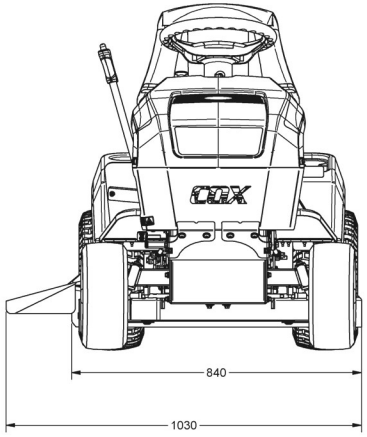

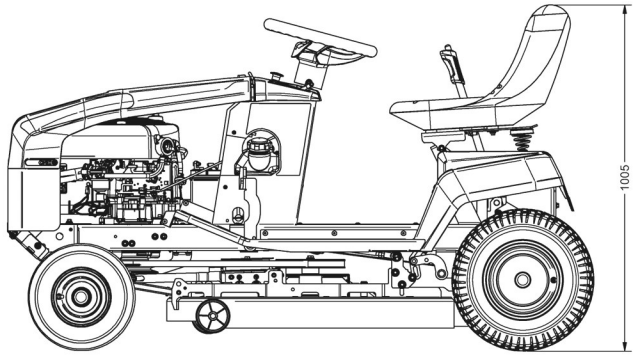

STOCKMAN (BASE MODEL)
SHOWN WITH 32" CUTTER DECK



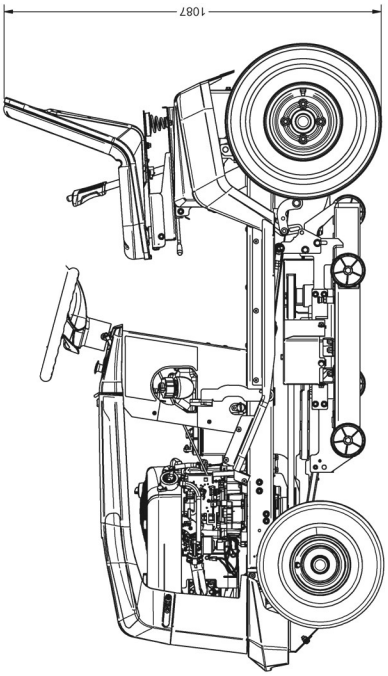

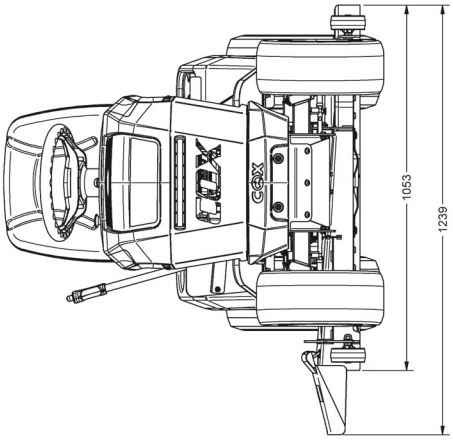

STOCKMAN PLUS
SHOWN WITH 40" CUTTER DECK

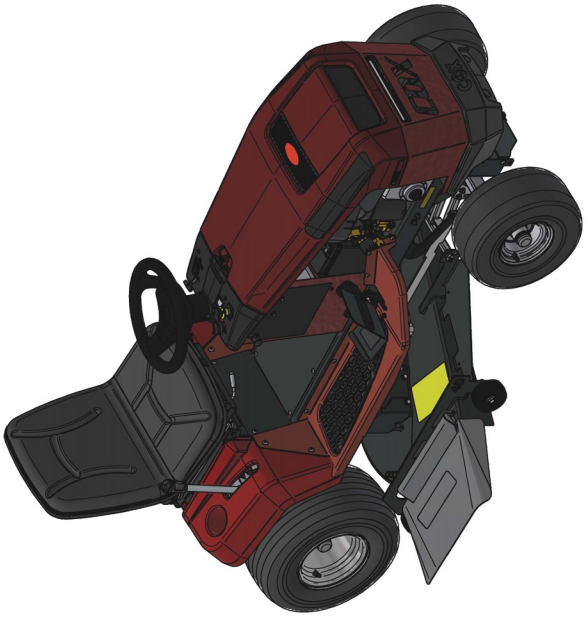

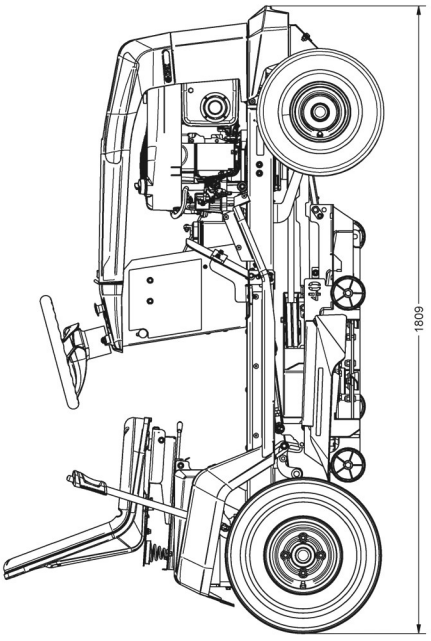

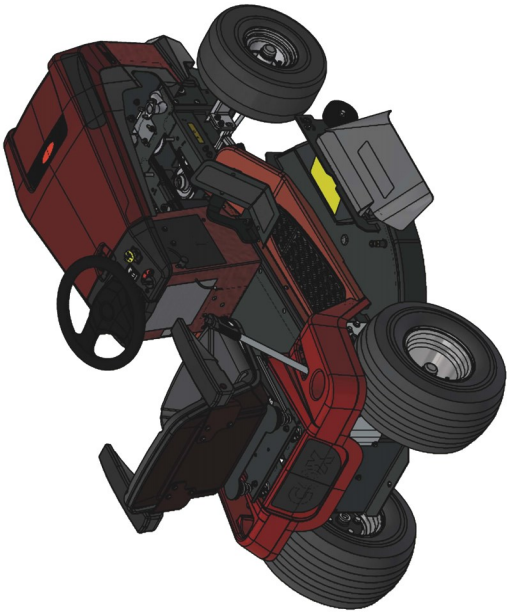

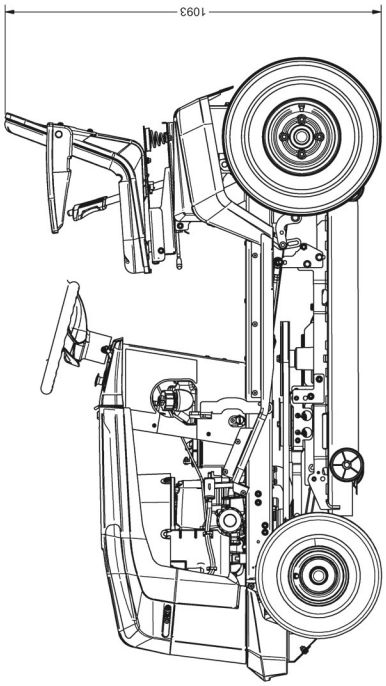

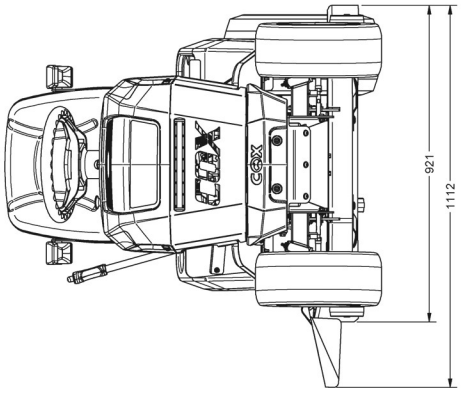

STOCKMAN PRO
SHOWN WITH 35" CUTTER DECK



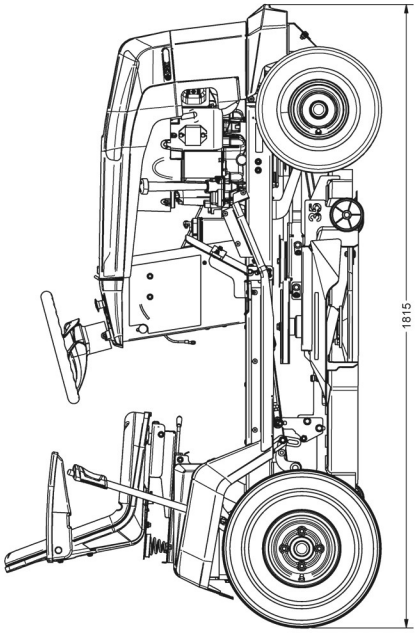

FRONT WHEEL TOE ANGLE ALIGNMENT

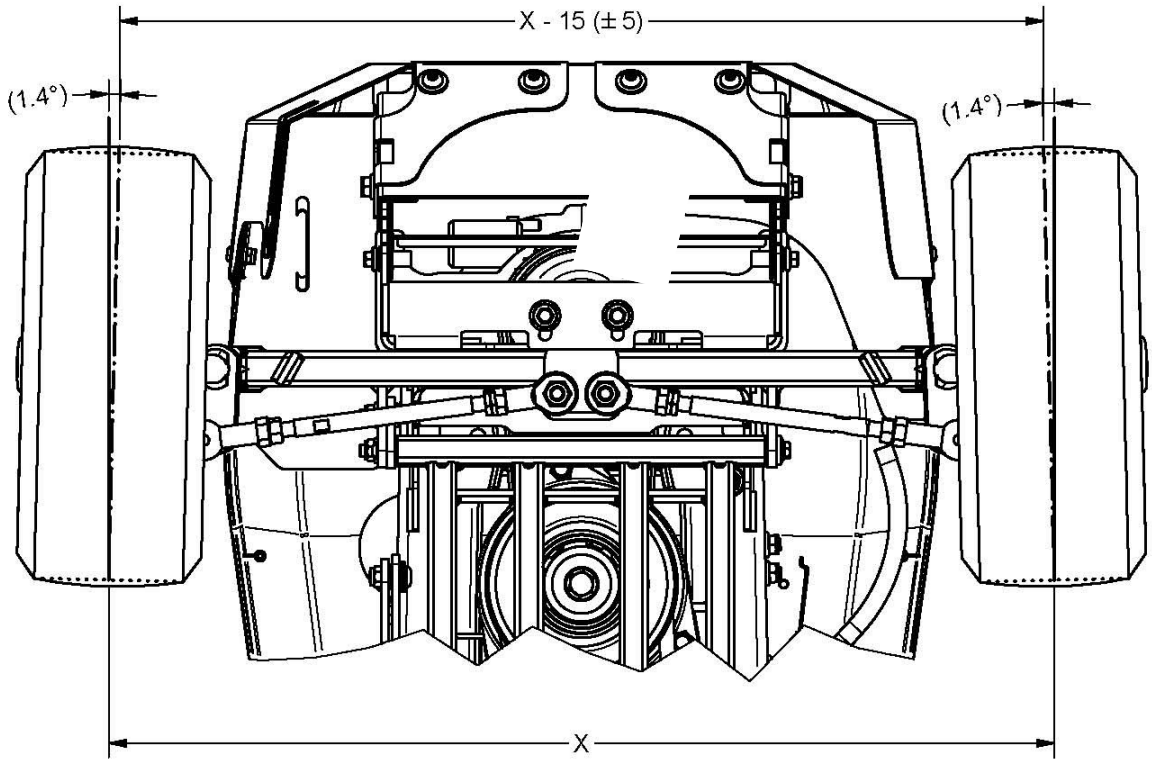

CUTTER BLADE TIP ALIGNMENT & LEVEL - ALL DECKS (TAKEN AT MINIMUM CUT HEIGHT)

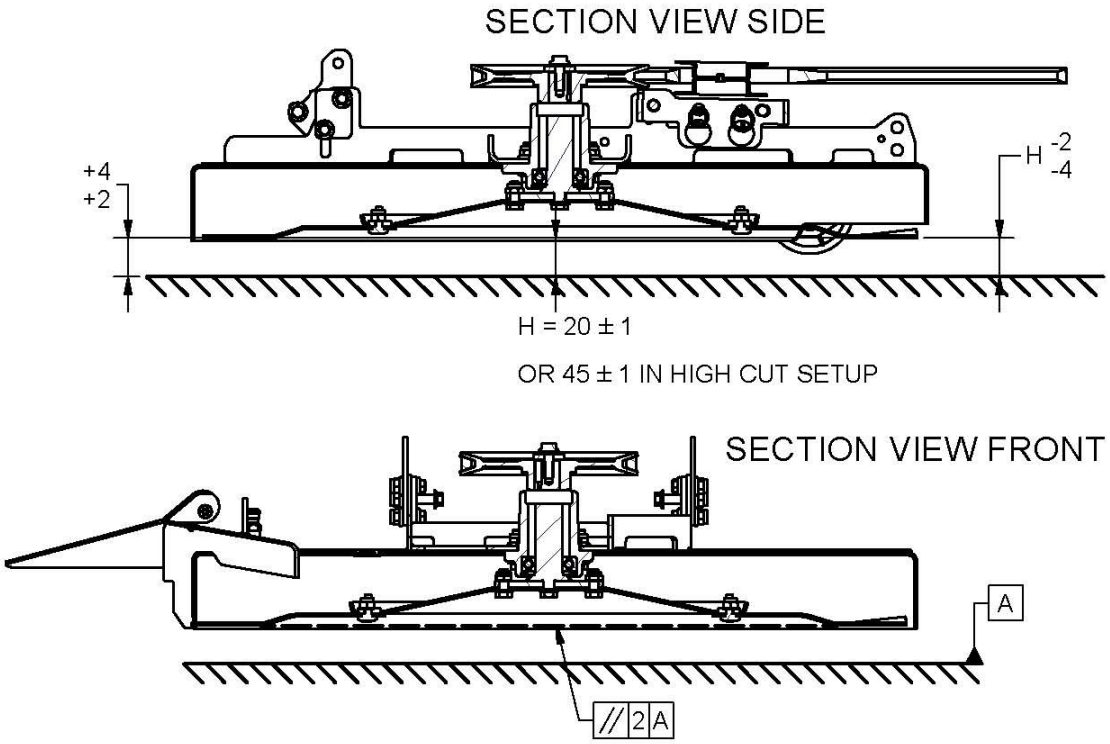

MAINTENANCE INSTRUCTIONS

It is the owner's responsibility to ensure that all periodical checks, necessary adjustments, services and repairs are carried out. Failure to do so may result in death, personal injury and/or property damage.

Before attempting any maintenance, stop engine, ensure mowing attachment blades have stopped rotating, disconnect spark plug lead from spark plug and ground it, disconnect battery at negative terminal, to prevent accidental starting.
Position machine on a flat level surface for maintenance.
Never alter factory setting of maximum engine R.P.M (3600).
Reference to the left or right side of the machine is determined by sitting in the operating position.

IMPORTANT:
If operating in adverse conditions such as those mentioned below, change engine oil, air filter, lubrication and adjustments should be carried out at less time intervals than specified in this booklets maintenance schedule. Ensure machine has park brake engaged when attempting to start engine.

a. Mowing in hot or wet conditions.
b. Mowing in rough or dusty conditions.
c. Mowing hilly areas or continuous heavy load conditions.

CHECK & ADJUST ENGINE OIL LEVEL-
Refer to engine owners manual for correct method to check & adjust engine oil level.

CHANGE ENGINE OIL & OIL FILTER (IF FITTED)-
Refer to engine owner's manual for correct method to change engine oil & oil filter.

CHECK ENGINE AIR CLEANER & FOAM PRE-CLEANER-
Refer to engine owner's manual for correct method to check and service engine air cleaner & foam pre-cleaner.

CHECK ENGINE ROTATING SCREEN -
Refer to engine owners manual for correct method to check and clean engine rotating screen /debris guard.

TRANSAXLE-
Refer to transaxle manufacturers website for correct method to check and service transaxle

LUBRICATION OF MACHINE-
Lubrication of machine must be carried out every 25 hours of operation or once a month, whichever occurs first. Lubricate at shorter time intervals when operated under adverse conditions.

OILING: A few drops of oil should be placed at the following points: Steering rod ends, mower suspension link rod end, height adjustment mechanism. In dusty conditions use silicon spray lubricant instead of oil.

CHAIN: Use only chain lube for lubrication of the steering chain.

GREASE POINTS: Grease nipples are located on top of the front wheel stub axles.

GREASE STUB AXLES: Clean grease nipple, use grease gun and general-purpose grease to force old grease from top and bottom of front axle bushes. If grease is not released from bottom of bush, jack up front of machine and try again.

ENGINE TO CUTTER VEE BELT ADJUSTMENT-
Tension is automatically adjusted by the belt tensioning springs.

ENGINE TO TRANSAXLE VEE BELT ADJUSTMENT-
Tension is automatically adjusted by the belt tensioning springs. Belt tension can be affected by incorrect clutch linkage adjustment. If this occurs see **CHECK CLUTCH OPERATION.**

CHECK CLUTCH OPERATION-
With pedal in up position check for 3-4mm play in the disengage linkage slot and the disengagement arm pin. To adjust remove 'R' pin and washer, turn linkage in or out to achieve correct play then replace 'R' pin and washer. Refer Diagram A.

CHECK BRAKE OPERATION –
Apply Clutch/Brake pedal and set park brake, if mower can be pushed then the brake pad, brake spring, or brake linkage may need servicing.

CHECK TYRE PRESSURES-
Uneven pressure can give an uneven finish when mowing and overly low or high pressures may cause damage to tyres and/ or tubes.

The recommended pressure is:
All models - Front 140kPa (20 P.S.I.).
Base model - Rear 140kPa (20 P.S.I.)
Plus & Pro models - Rear 103kPa (15 P.S.I.)
.

Diagram A.

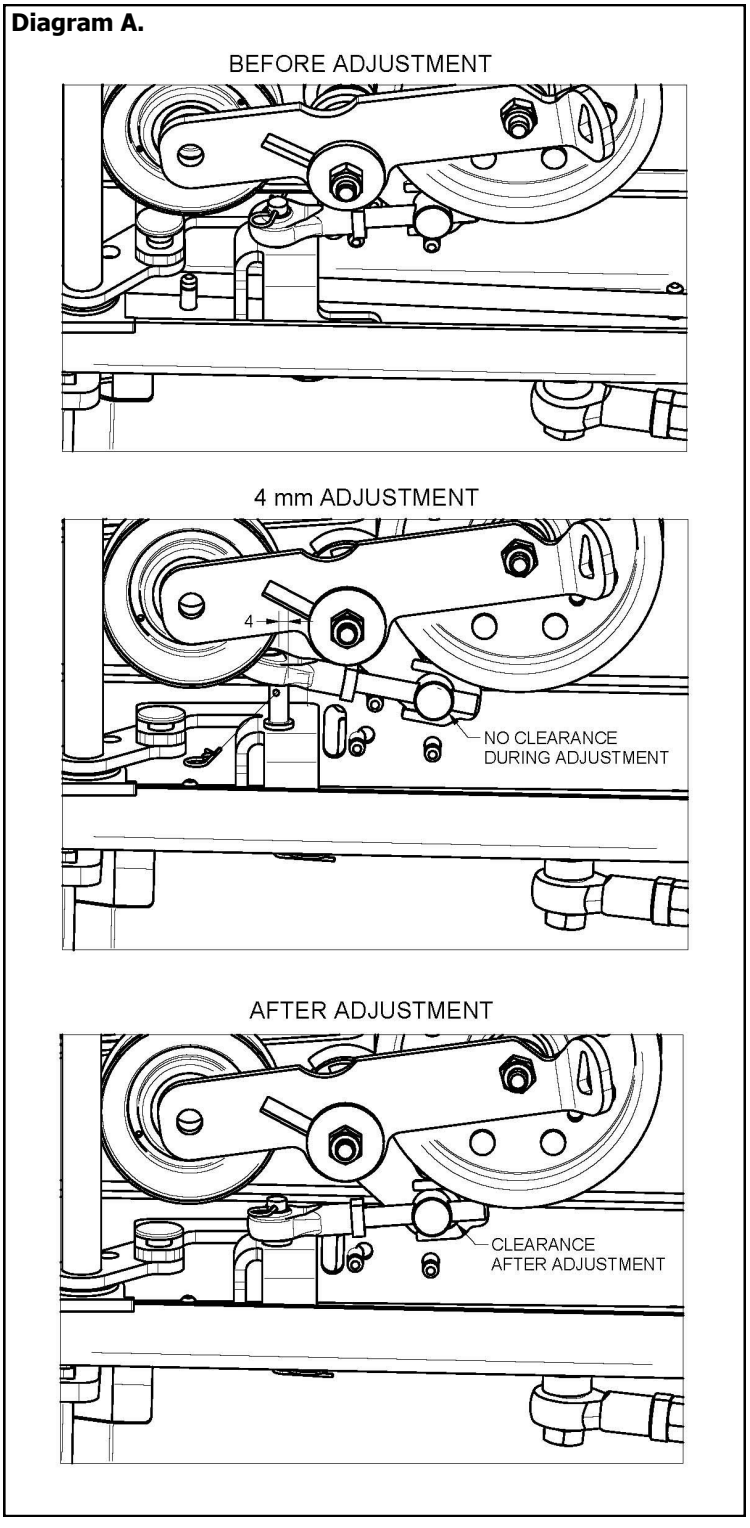

MAINTENANCE INSTRUCTIONS cont.

CHECK OPERATION OF SAFETY SWITCHES:
As per Pre-delivery instructions

CUTTER BRAKE ADJUSTMENT-
If cutter fails to stop within 8 seconds, electric clutch/brake requires adjustment by servicing dealer.

TO ADJUST STEERING CHAIN- Adjust chain by loosening the four bolts which hold the steering idler shaft mounting brackets in position, slide forward to tension chain then retighten bolts.

DECK LEVELLING INSTRUCTIONS
PROCEDURE:

1. Park machine on level ground and check tyre inflation is correct.
2. Check that all the blades are cutting at the same height. Blades should pass around the skirt of the deck at about 2-3mm above the level of the skirt.
3. Place spacers underneath deck skirt as per below diagram.
4. *If appropriately sized spacers aren't Available, contact a Cox Service agent for KIT375 which contains the required spacers (SERVT006, SERVT007, and SERVT008), for standard cut height and high cut height setup (32" and 35" Plus/ Pro models only).*

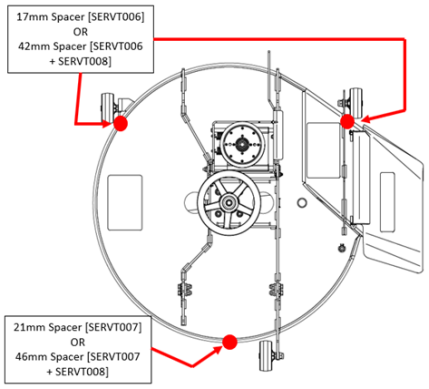

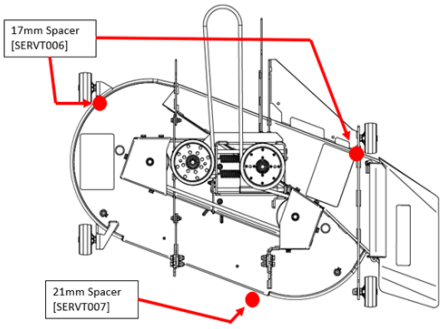

5. Lower deck onto spacers, then loosen the lock nuts on anti-skid wheels and leveling plates, ensure they slide freely in their adjustment slots.



6. Loosen lock nuts on rear linkages.
7. Remove fasteners holding rear linkages to deck leveling plates.
8. Tighten lock nuts on all deck leveling adjustment plates. Ensure they are fully down in their slots.
9. Adjust length of rear links until the lower rod end holes lines up with its hole in the deck leveling adjustment plate.
10. Now extend length of tie-rod by 2 full turns. The length of both linkages must be setup before either is re-attached. This puts the tie-rod in compression and removes slop from the linkage system.

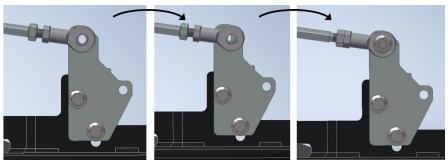

11. Tighten lock nuts on all anti-skid wheels. Ensure they are fully down in their slots. Raise deck and remove spacers. Check cut height at the blade tip. Cut height at the front of the deck should be 3-5mm lower then at the back. Cut height should be roughly equal on the far left and far right of the deck.

Note: Shimming the spacers may be required to get the cutter perfectly level. The extensive welding that goes into a Cox fabricated deck does cause a small amount of distortion when the decks are manufactured. This effect is particularly prevalent on the 40" twin cutter deck.

REPLACE BLADES-
Stop engine, ensure mowing attachment blades have stopped rotating, disconnect spark plug lead from spark plug and ground it, disconnect battery at negative terminal, to prevent accidental starting. Check condition of cutter disc remove the blade nut using a suitable spanner (if using a socket remove the blanking grommet to gain access to the blade nut) and replace all blades, bolts, nuts and washers to preserve balance, tighten blade nut to (36-40Nm). Do not over tighten. Re-fit blanking grommet if removed.

TO REMOVE MOWING ATTACHMENT –

1. Stop engine, ensure mowing attachment blades have stopped rotating, and spark plug lead is disconnected & grounded, disconnect battery negative terminal to prevent accidental starting, disconnect the belt tensioning spring (front left hand side of mowing attachment).
2. Lower mowing attachment onto 20mm block front and rear.
3. Remove cutter belt from engine pulley.
4. Remove two M10 x 50mm bolts, nuts & washers from mower suspension link at rear of the mowing attachment.
5. Remove mowing attachment pivot pin lock screw and nut (6mm) and remove mowing attachment pivot pin.
6. Remove the M8x25mm bolt from the cradle frame attachment bracket.
7. Turn the front wheels a little to the left and twist the mowing attachment to the right and slide the deck from under the mower to the right side.
8. Re-assemble in reverse order.
9. To assist in refitting mowing attachment pivot pin, raise the mowing attachment slightly.
10. Refit mower suspension link & lifting links and M10x50mm bolts, nuts and washers.
11. Refit cutter belt, connect belt tensioning spring and refit spark plug lead and battery terminal.

BATTERY MAINTENANCE-
Batteries can be dangerous as they contain acids (corrosive chemicals), flammable vapours, large amounts of stored electrical energy, which may cause chemical burns, explosions or fires. Wear goggles and a protective face guard. Remove jewellery/ watches before handling the battery. Do not perform any battery maintenance where there are open flames or the possibility of sparks. Always work in a well ventilated area. Ensure the top of the battery is clean and dry (free of dirt and grime) as a dirty battery can discharge across the top of the battery casing. Inspect the terminals, screws and cables for breakage, damage or loose connections and they are clean, tight and free of corrosion. When not in use, a battery discharges by as much as 1% a day, more when the climate is warm. To make up for this loss, a boosting charge should be given once a month. Disconnect battery terminals (negative terminal first) to charge, then allow to stand minimum 1/2hr before re-connecting (negative terminal first). If a battery is not used for a period of more than three (3) months, the terminals should be disconnected and trickle charged at two (2) amps for two (2) hours once every three (3) months or before use. At the end of any maintenance ensure the battery is securely fastened in place, especially if it has been removed.

CLEANING MACHINE WITH WATER–
Do not use a pressure washer. Only use low pressure water.
Allow machine to cool down (min 2 hrs) before hosing down. Start engine and engage drive and cutting systems to clear water from pulleys and belts. Stop engine and allow machine to dry. Lubricate as required. Do not cover machine with plastic or vinyl type material.

CLEANING AND POLISHING PLASTIC BONNET & MUDGUARD -
To keep scratches on bonnet & foot pan to minimum, do not rub or brush off with bare hands, use a soft cloth or a light flow of compressed air. For dirt, wash with a steady stream of water only (no detergent), then blow off excess water with air. To polish remove excess dust or dirt. When surface is dry, spray on an automotive type plastic preservative and leave on for 30 to 60 seconds. Using a dry soft cloth (i.e. cheesecloth) wipe off to bring up lustre.

MOWING ATTACHMENT WASH PORT(S)-
One wash port per cutter head is fitted to the mowing attachment. These are use to clear grass clippings from the underside of the deck and to extend the life of the mowing attachment.
PROCEDURE-

1. Park mower on a flat level surface.
2. Connect hose to wash port and turn on water.
3. Sit on & start mower, engage mowing attachment, lower deck to lowest height position and run for 60 seconds.
4. Disengage mowing attachment, turn off mower.
5. Turn off water supply and disconnect hose. For 40" deck repeat steps 2 & 3 for opposite side wash port.
6. Restart mower, raise the mowing attachment and relocate mower to dry.

GENUINE SPARE PARTS-
Always use Genuine COX Spare Parts. Use of non-genuine COX spare parts will void your warranty.

SAFETY FIRST -
The use of mechanical devices can cause injury or property damage if incorrect procedures are used. Please ensure all operators & users read & understand all safety instructions in this manual.

USE GENUINE COX SPARE PARTS ONLY	
PART NO.	**DESCRIPTION**
SKIT54N	32" & 35" BLADE SET (LOW LIFT)
SKIT55N	32" & 35" BLADE SET (HI LIFT) OPTIONAL
V75	ENGINE TO TRANSAXLE BELT
V76K	ENGINE TO CUTTER (32") VEE BELT
V46	ENGINE TO CUTTER (35") VEE BELT
V83	ENGINE TO CUTTER (40") VEE BELT
BATTERY	PURCHASE LOCALLY
A210020	STEERING CHAIN
	OPTIONAL ACCESSORIES
CA183	KIT, MULCHING, 32"
CA17716D	KIT, MULCHING, 35"
CA215	KIT, MULCHING, 40"
C54 & CA217	SIDE CATCHER & MOUNT KIT 32"
C54 & CA219	SIDE CATCHER & MOUNT KIT 35"
KIT375	DECK LEVELLING TOOL
KIT376	HIGH CUT PLUS/PRO

We are proud that you have purchased a Cox Ride-on and urge you to follow these instructions to obtain the maximum life for your machine.
If in doubt check with your Dealer.

MAINTENANCE SCHEDULE

BEFORE EACH USE

Check engine oil level, adjust if required
Check engine air cleaner & foam pre-cleaner, service if require
Check engine rotating screen/finger guard, clean if required
Check operation of safety switches, service if required
Check clutch/ brake operation, adjust if required
Check tyre pressures, adjust if required
Grease stub axles
Lubricate steering ball joints
Check for loose fasteners, tighten if required
Check mowing attachment cutter blades, bolts, nuts, housing, chute, grass catcher and guards for wear or damage, repair or replace if required
Lubricate as necessary

BEFORE EXTENDED STORAGE

Change engine oil - Clean machine - Lubricate fully - Remove all fuel from engine, fuel lines & tank or add fuel stabiliser

EVERY 5 HOURS

Check engine oil level, adjust if required
Check engine air cleaner & foam pre-cleaner, service if required*
Check engine rotating screen/finger guard, clean if required*

*Service more often under dusty conditions, or where air borne debris is present

FIRST MONTH OR 5 HOURS which ever occurs first

Change engine oil
Check engine air cleaner & foam pre-cleaner, service if req
Check engine rotating screen/finger guard, clean if required
Check for loose fasteners, tighten if required
Check clutch/ brake operation, adjust if required
Check operation of safety switches, service if required
Check tyre pressures, adjust if required
Grease stub axles
Lubricate steering ball joints (rod ends)
Check mowing attachment cutter blades, bolts, nuts, housing, chute, grass catcher and guards for damage, repair or replace if required

*Service more often under dusty conditions, or where air borne debris is present

DATE / / HOURS.....DEALER.....

3 MONTHS OR 25 HOURS which ever occurs first

Change engine oil if operating under heavy load or high ambient temperature
Check engine air cleaner & foam pre-cleaner, service if req *
Check engine rotating screen/finger guard, clean if required *
Check battery condition, service if required
Check clutch/ brake operation, adjust if required
Check operation of safety switches and replace if required
Check tyre pressures, adjust if required
Grease stub axles *
Lubricate steering ball joints (rod ends)
Check for loose fasteners, tighten if required
Check mowing attachment cutter blades, bolts, nuts, housing, chute, grass catcher and guards for wear or damage, repair or replace if required

*Service more often under dusty conditions, or where air borne debris is present

DATE / / HOURS.....DEALER.....

6 MONTHS OR 50 HOURS which ever occurs first

Change engine oil
If fitted clean engine exhaust spark arrester
Check engine air cleaner & foam pre-cleaner, service if req *
Check engine rotating screen/finger guard, clean if required *
Check clutch/ brake operation and pads for wear, adjust or replace if required
Check tyre pressures, adjust if required
Check operation of safety switches, service if required
Check belts for wear or damage, replace if required
Grease stub axles *
Lubricate steering ball joints (rod ends)
Check steering chain and sprockets for wear, adjust if required
Check mowing attachment electric clutch brake air gap, adjust if req.
Check mowing attachment electromagnetic clutch/brake for operation, service if required
Check for loose fasteners, tighten if required
Check battery condition, service if required
Check mowing attachment cutter blades, bolts, nuts, housing, chute, grass catcher and guards for wear or damage, repair or replace if required
Replace Hydrostatic transaxle oil with 5W50 synthetic oil

*Service more often under dusty conditions, or where air borne debris is present

DATE / / HOURS.....DEALER.....

9 MONTHS OR 75 HOURS which ever occurs first

Change engine oil if operating under heavy load or high ambient temperature
Check engine air cleaner & foam pre-cleaner, service if req *
Check engine rotating screen/finger guard, clean if required *
Check for loose fasteners, tighten if required
Check clutch/ brake operation, adjust if required
Check operation of safety switches and replace if required
Check tyre pressures, adjust if required
Grease stub axles *
Lubricate steering ball joints (rod ends)
Check battery condition, service if required
Check mowing attachment cutter blades, bolts, nuts, housing, chute, grass catcher and guards for wear or damage, repair or replace if required

*Service more often under dusty conditions, or where air borne debris is present

DATE / / HOURS.....DEALER.....

12 MONTHS OR 100 HOURS which ever occurs first

If fitted replace engine oil filter.
Change engine oil.
Check engine spark plug, clean, adjust, or replace if required.
If fitted clean engine exhaust spark arrester.
Check engine air cleaner & foam pre-cleaner, service if req *.
Replace engine air cleaner cartridge, service if required*.
Clean engine cooling system*.
Check clutch/ brake operation and pads for wear, adjust or replace if req.
Replace in-line fuel filter.
Check tyre pressures, adjust if required.
Grease stub axles *.
Lubricate steering ball joints (rod ends)
Check belts for wear or damage, replace if required.
Check operation of safety switches, service if required.
Check mowing attachment electromagnetic clutch/brake for operation, service if required
Check battery condition, service if required.
Check for loose fasteners, tighten if required
Check steering chain and sprockets for wear, adjust if required.
Check mowing attachment cutter blades, bolts, nuts, housing, chute, grass catcher and guards for wear or damage, repair or replace if required.

*Service more often under dusty conditions, or where air borne debris is present

DATE / / HOURS.....DEALER.....

15 MONTHS OR 125 HOURS which ever occurs first

Change engine oil if operating under heavy load or high ambient temperature.
Check engine air cleaner & foam pre-cleaner, service if required *.
Check engine rotating screen/finger guard, clean if required *
Check operation of safety switches and replace if required.
Check clutch/ brake operation, adjust if required
Grease stub axles *.
Lubricate steering ball joints (rod ends)
Check tyre pressures, adjust if required.
Check for loose fasteners, tighten if required.
Check battery condition, service if required
Check mowing attachment cutter blades, bolts, nuts, housing, chute, grass catcher and guards for wear or damage, repair or replace if required

*Service more often under dusty conditions, or where air borne debris is present

DATE / / HOURS.....DEALER.....

18 MONTHS OR 150 HOURS which ever occurs first

Change engine oil.
If fitted clean engine exhaust spark arrestor.
Check engine air cleaner & foam pre-cleaner, service if req*.
Check engine rotating screen/finger guard, clean if req *.
Check clutch/ brake operation and lining for wear, adjust or replace if req.
Check operation of safety switches, service if required.
Check tyre pressures, adjust if required.
If fitted check mowing attachment brake pad for wear, replace if required.
Check battery condition, service if required.
Check for loose fasteners, tighten if required.
Check belts for wear or damage, replace if required.
Check steering chain and sprockets for wear, adjust if required.
Grease stub axles *.
Lubricate steering ball joints (rod ends)
Check mowing attachment electric clutch brake air gap, adjust if req.
Check mowing attachment cutter blades, bolts, nuts, housing, chute, grass catcher and guards for wear or damage, repair or replace if req

*Service more often under dusty conditions, or where air borne debris is present

DATE / / HOURS.....DEALER.....

21 MONTHS OR 175 HOURS which ever occurs first

Change engine oil if operating under heavy load or high ambient temperature.
Check engine air cleaner & foam pre-cleaner, service if required *.
Check engine rotating screen/finger guard, clean if required *.
Check clutch/ brake operation, adjust if required.
Check operation of safety switches and replace if required.
Check tyre pressures, adjust if required.
Grease stub axles *.
Lubricate steering ball joints (rod ends)
Check battery condition, service if required.
Check for loose fasteners, tighten if required.
Check mowing attachment cutter blades, bolts, nuts, housing, chute, grass catcher and guards for wear or damage, repair or replace if required

*Service more often under dusty conditions, or where air borne debris is present

DATE / / HOURS.....DEALER.....

24 MONTHS OR 200 HOURS which ever occurs first

If fitted replace engine oil filter. Change engine oil.
Check engine spark plug, clean, adjust, or replace if required.
If fitted clean engine exhaust spark arrestor.
Check engine air cleaner & foam pre-cleaner, service if req*
Check engine air cleaner cartridge, service if required.
Clean engine cooling system*.
Replace in-line fuel filter.
Check clutch/ brake operation and pads for wear, adjust or replace if req.
Check operation of safety switches, service if required.
Check tyre pressures, adjust if required.
Grease stub axles *
Lubricate steering ball joints (rod ends)
Check steering chain and sprockets for wear, adjust if req
Check belts for wear or damage, replace if required.
Check mowing attachment electromagnetic clutch/brake for operation, service if required
Check battery condition, service if required
Check for loose fasteners, tighten if required
Check mowing attachment cutter blades, bolts, nuts, housing , chute, grass catcher and guards for wear or damage, repair or replace if required.

*Service more often under dusty conditions, or where air borne debris is present

DATE / / HOURS.....DEALER.....

27 MONTHS OR 225 HOURS which ever occurs first

Change engine oil if operating under heavy load or high ambient temperature.
Check engine air cleaner & foam pre-cleaner, service if req
Check engine rotating screen/finger guard, clean if req *.
Check clutch/ brake operation, adjust if required.
Check operation of safety switches and replace if req.
Check tyre pressures, adjust if required.
Grease stub axles *.
Lubricate steering ball joints (rod ends)
Check battery condition, service if required.
Check for loose fasteners, tighten if required.
Check mowing attachment cutter blades, bolts, nuts, housing, chute, grass catcher and guards for wear or damage, repair or replace if req.

*Service more often under dusty conditions, or where air borne debris is present

DATE / / HOURS.....DEALER.....

30 MONTHS OR 250 HOURS which ever occurs first

Change engine oil.
If fitted clean engine exhaust spark arrestor.
Check engine air cleaner & foam pre-cleaner, service if req*.
Check engine rotating screen/finger guard, clean if req *.
Check clutch/ brake operation and pads for wear, adjust or replace if req.
Check operation of safety switches, service if required.
Check tyre pressures, adjust if required.
Grease stub axles *.
Lubricate steering ball joints (rod ends)
Check steering chain and sprockets wear, adjust if required.
Check mowing attachment electric clutch brake air gap, adjust if req.
Check mowing attachment cutter blades, bolts, nuts, housing, chute, grass catcher and guards for wear or damage, repair or replace if required.
Check belts for wear or damage, replace if required
Check battery condition, service if required.
Check for loose fasteners, tighten if required
Replace Hydrostatic transaxle oil with 5W50 synthetic oil

*Service more often under dusty conditions, or where air borne debris is present

DATE / / HOURS.....DEALER.....

33 MONTHS OR 275 HOURS which ever occurs first

Change engine oil if operating under heavy load or high ambient temp.
Check engine air cleaner & foam pre-cleaner, service if req *
Check engine rotating screen/finger guard, clean if req *
Check clutch/ brake operation, adjust if required
Check operation of safety switches and replace if required
Check tyre pressures, adjust if required
Grease stub axles *
Lubricate steering ball joints (rod ends)
Check mowing attachment cutter blades, bolts, nuts, housing , chute, grass catcher and guards for wear or damage, repair or replace if required
Check battery condition, service if required
Check for loose fasteners, tighten if required

*Service more often under dusty conditions, or where air borne debris is present

DATE / / HOURS.....DEALER.....

36 MONTHS OR 300 HOURS which ever occurs first

If fitted replace engine oil filter Change engine oil
Check engine spark plug, clean, adjust, or replace if required
If fitted clean engine exhaust spark arrestor
Check engine air cleaner & foam pre-cleaner, service if req *
Check engine air cleaner cartridge, service if required
Clean engine cooling system*
Replace in-line fuel filter
Check clutch/ brake operation and lining for ware, adjust or replace if req
Check operation of safety switches, service if required
Check tyre pressures, adjust if required Grease stub axles *
Lubricate steering ball joints (rod ends)
Check steering chain and sprockets wear, adjust if required
Check belts for wear or damage, replace if required
If fitted check mowing attachment brake pad for wear, replace if required
Check battery condition, service if required
Check for loose fasteners, tighten if required
Check mowing attachment electric clutch brake air gap, adjust if req.
Check mowing attachment cutter blades, bolts, nuts, housing, chute, grass catcher and guards for wear or damage, repair or replace if required

*Service more often under dusty conditions, or where air borne debris is present

DATE / / HOURS.....DEALER.....

39 MONTHS OR 325 HOURS which ever occurs first

If fitted replace engine oil filter Change engine oil
Check engine spark plug, clean, adjust, or replace if required
If fitted clean engine exhaust spark arrestor
Check engine air cleaner & foam pre-cleaner, service if req *
Check engine air cleaner cartridge, service if required
Clean engine cooling system*
Replace in-line fuel filter
Check clutch/ brake operation and lining for ware, adjust or replace if req
Check operation of safety switches, service if required
Check tyre pressures, adjust if required Grease stub axles *
Lubricate steering ball joints (rod ends)
Check steering chain and sprockets wear, adjust if required
Check belts for wear or damage, replace if required
If fitted check mowing attachment brake pad for wear, replace if required
Check battery condition, service if required
Check for loose fasteners, tighten if required
Check mowing attachment electric clutch brake air gap, adjust if req.
Check mowing attachment cutter blades, bolts, nuts, housing, chute, grass catcher and guards for wear or damage, repair or replace if required

*Service more often under dusty conditions, or where air borne debris is present

DATE / / HOURS.....DEALER.....

42 MONTHS OR 350 HOURS which ever occurs first

If fitted replace engine oil filter Change engine oil
Check engine spark plug, clean, adjust, or replace if required
If fitted clean engine exhaust spark arrestor
Check engine air cleaner & foam pre-cleaner, service if req *
Check engine air cleaner cartridge, service if required
Clean engine cooling system*
Replace in-line fuel filter
Check clutch/ brake operation and lining for ware, adjust or replace if req
Check operation of safety switches, service if required
Check tyre pressures, adjust if required Grease stub axles *
Lubricate steering ball joints (rod ends)
Check steering chain and sprockets wear, adjust if required
Check belts for wear or damage, replace if required
If fitted check mowing attachment brake pad for wear, replace if required
Check battery condition, service if required
Check for loose fasteners, tighten if required
Check mowing attachment electric clutch brake air gap, adjust if req.
Check mowing attachment cutter blades, bolts, nuts, housing, chute, grass catcher and guards for wear or damage, repair or replace if required

*Service more often under dusty conditions, or where air borne debris is present

DATE / / HOURS.....DEALER.....

45 MONTHS OR 375 HOURS which ever occurs first

If fitted replace engine oil filter Change engine oil
Check engine spark plug, clean, adjust, or replace if required
If fitted clean engine exhaust spark arrestor
Check engine air cleaner & foam pre-cleaner, service if req *
Check engine air cleaner cartridge, service if required
Clean engine cooling system*
Replace in-line fuel filter
Check clutch/ brake operation and lining for ware, adjust or replace if req
Check operation of safety switches, service if required
Check tyre pressures, adjust if required Grease stub axles *
Lubricate steering ball joints (rod ends)
Check steering chain and sprockets wear, adjust if required
Check belts for wear or damage, replace if required
If fitted check mowing attachment brake pad for wear, replace if required
Check battery condition, service if required
Check for loose fasteners, tighten if required
Check mowing attachment electric clutch brake air gap, adjust if req.
Check mowing attachment cutter blades, bolts, nuts, housing, chute, grass catcher and guards for wear or damage, repair or replace if required

*Service more often under dusty conditions, or where air borne debris is present

DATE / / HOURS.....DEALER.....

48 MONTHS OR 400 HOURS which ever occurs first

If fitted replace engine oil filter Change engine oil
Check engine spark plug, clean, adjust, or replace if required
If fitted clean engine exhaust spark arrestor
Check engine air cleaner & foam pre-cleaner, service if req *
Check engine air cleaner cartridge, service if required
Clean engine cooling system*
Replace in-line fuel filter
Check clutch/ brake operation and lining for ware, adjust or replace if req
Check operation of safety switches, service if required
Check tyre pressures, adjust if required Grease stub axles *
Lubricate steering ball joints (rod ends)
Check steering chain and sprockets wear, adjust if required
Check belts for wear or damage, replace if required
If fitted check mowing attachment brake pad for wear, replace if required
Check battery condition, service if required
Check for loose fasteners, tighten if required
Check mowing attachment electric clutch brake air gap, adjust if req.
Check mowing attachment cutter blades, bolts, nuts, housing, chute, grass catcher and guards for wear or damage, repair or replace if required

*Service more often under dusty conditions, or where air borne debris is present

DATE / / HOURS.....DEALER.....

51 MONTHS OR 425 HOURS which ever occurs first

If fitted replace engine oil filter Change engine oil
Check engine spark plug, clean, adjust, or replace if required
If fitted clean engine exhaust spark arrestor
Check engine air cleaner & foam pre-cleaner, service if req *
Check engine air cleaner cartridge, service if required
Clean engine cooling system*
Replace in-line fuel filter
Check clutch/ brake operation and lining for ware, adjust or replace if req
Check operation of safety switches, service if required
Check tyre pressures, adjust if required Grease stub axles *
Lubricate steering ball joints (rod ends)
Check steering chain and sprockets wear, adjust if required
Check belts for wear or damage, replace if required
If fitted check mowing attachment brake pad for wear, replace if required
Check battery condition, service if required
Check for loose fasteners, tighten if required
Check mowing attachment electric clutch brake air gap, adjust if req.
Check mowing attachment cutter blades, bolts, nuts, housing, chute, grass catcher and guards for wear or damage, repair or replace if required

*Service more often under dusty conditions, or where air borne debris is present

DATE / / HOURS.....DEALER.....

54 MONTHS OR 450 HOURS which ever occurs first

If fitted replace engine oil filter Change engine oil
Check engine spark plug, clean, adjust, or replace if required
If fitted clean engine exhaust spark arrestor
Check engine air cleaner & foam pre-cleaner, service if req *
Check engine air cleaner cartridge, service if required
Clean engine cooling system*
Replace in-line fuel filter
Check clutch/ brake operation and lining for ware, adjust or replace if req
Check operation of safety switches, service if required
Check tyre pressures, adjust if required Grease stub axles *
Lubricate steering ball joints (rod ends)
Check steering chain and sprockets wear, adjust if required
Check belts for wear or damage, replace if required
If fitted check mowing attachment brake pad for wear, replace if required
Check battery condition, service if required
Check for loose fasteners, tighten if required
Check mowing attachment electric clutch brake air gap, adjust if req.
Check mowing attachment cutter blades, bolts, nuts, housing, chute, grass catcher and guards for wear or damage, repair or replace if required

*Service more often under dusty conditions, or where air borne debris is present

DATE / / HOURS.....DEALER.....

57 MONTHS OR 475 HOURS which ever occurs first

If fitted replace engine oil filter Change engine oil
Check engine spark plug, clean, adjust, or replace if required
If fitted clean engine exhaust spark arrestor
Check engine air cleaner & foam pre-cleaner, service if req *
Check engine air cleaner cartridge, service if required
Clean engine cooling system*
Replace in-line fuel filter
Check clutch/ brake operation and lining for ware, adjust or replace if req
Check operation of safety switches, service if required
Check tyre pressures, adjust if required Grease stub axles *
Lubricate steering ball joints (rod ends)
Check steering chain and sprockets wear, adjust if required
Check belts for wear or damage, replace if required
If fitted check mowing attachment brake pad for wear, replace if required
Check battery condition, service if required
Check for loose fasteners, tighten if required
Check mowing attachment electric clutch brake air gap, adjust if req.
Check mowing attachment cutter blades, bolts, nuts, housing, chute, grass catcher and guards for wear or damage, repair or replace if required

*Service more often under dusty conditions, or where air borne debris is present

DATE / / HOURS.....DEALER.....

60 MONTHS OR 500 HOURS which ever occurs first

If fitted replace engine oil filter Change engine oil
Check engine spark plug, clean, adjust, or replace if required
If fitted clean engine exhaust spark arrestor
Check engine air cleaner & foam pre-cleaner, service if req *
Check engine air cleaner cartridge, service if required
Clean engine cooling system*
Replace in-line fuel filter
Check clutch/ brake operation and lining for ware, adjust or replace if req
Check operation of safety switches, service if required
Check tyre pressures, adjust if required Grease stub axles *
Lubricate steering ball joints (rod ends)
Check steering chain and sprockets wear, adjust if required
Check belts for wear or damage, replace if required
If fitted check mowing attachment brake pad for wear, replace if required
Check battery condition, service if required
Check for loose fasteners, tighten if required
Check mowing attachment electric clutch brake air gap, adjust if req.
Check mowing attachment cutter blades, bolts, nuts, housing, chute, grass catcher and guards for wear or damage, repair or replace if required
Replace Hydrostatic transaxle oil with 5W50 synthetic oil

*Service more often under dusty conditions, or where air borne debris is present

DATE / / HOURS.....DEALER.....

From 60 months or 500 hour service, repeat the 58 month service every 3 months or 25 hours whichever occurs first or more often in dusty/adverse conditions.
(Replace Hydrostatic Transaxle oil with 5W50 synthetic oil every 200 hours after 250 hour service)

DATE / / HOURS.....DEALER.....

DATE / / HOURS.....DEALER.....

DATE / / HOURS.....DEALER.....

DATE / / HOURS.....DEALER.....

DATE / / HOURS.....DEALER.....

EXPLODED VIEW - BODY COMPONENTS 32" CUT

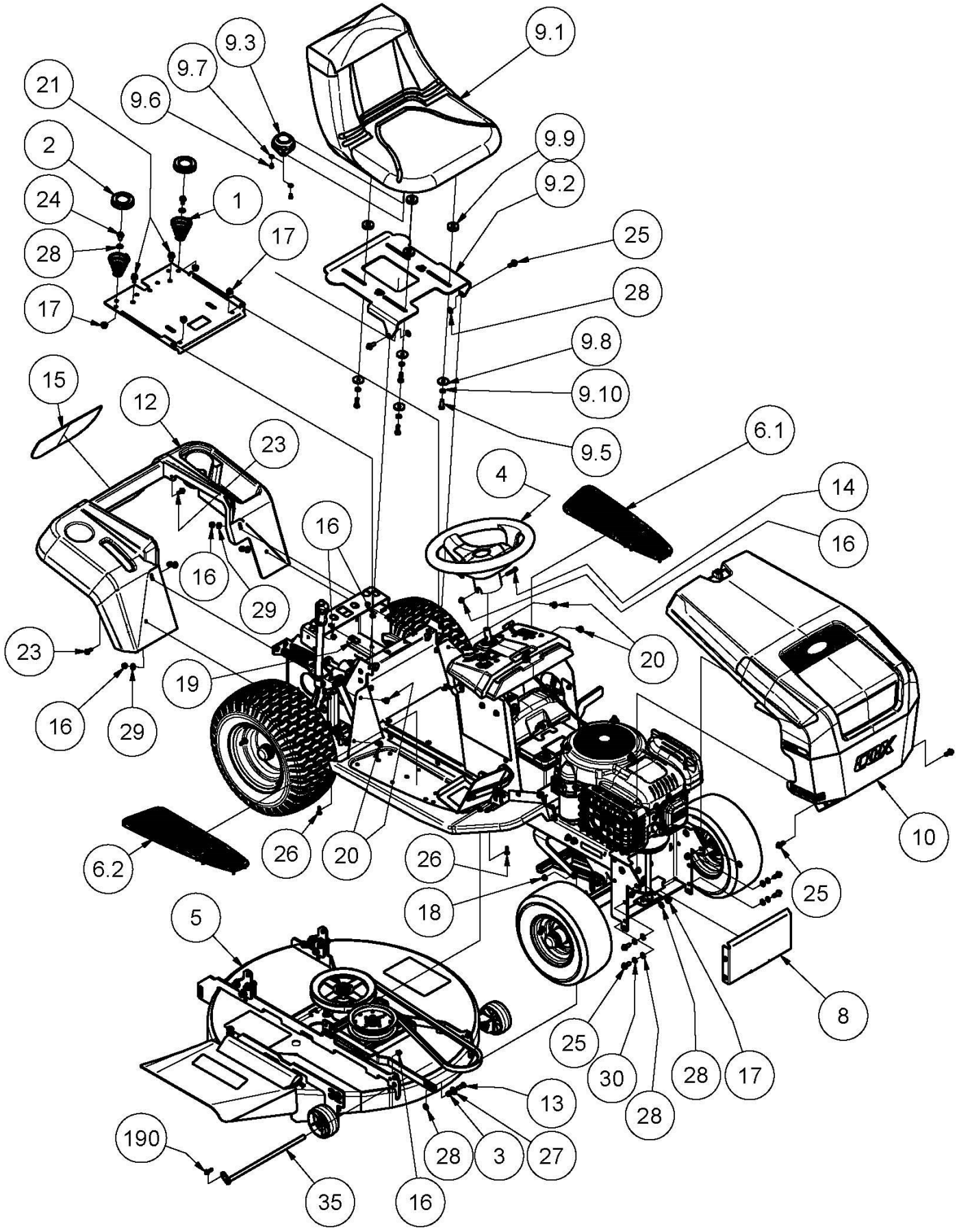

PARTS LIST - BODY COMPONENTS 32” CUT

ITEM	PART NUMBER	DESCRIPTION	QTY
1	A163060	Spring, Compression, Conical, Seat, Heavy	2
2	A168231	Cap, Spring, Seat	2
3	A210006Z	Sleeve, 8.3x12x8	1
4	A210032	Wheel, Steering, Dia=335mm	1
5		Sub-Assy, Deck, Side, 805(32"), H=(208)	1
6.1	A210073	Pad, Rubber, Footrest, Left	1
6.2	A210075	Pad, Rubber, Footrest, Right	1
7	A214041T	Panel, Trans Cover	1
8	A214060	Cover, Front Steering	1
9		Sub-Assy, Seat	1
9.1	A140210	Seat	1
9.2	A214048T	Mount, Seat	1
9.3	AM16512F	Switch, Seat	1
9.4	DEC24617E	Decal, Instruct, Wiring, Switch, Seat	1
9.5	SH0516C	Screw, Hex, Unc, 5/16"X1", Gr5	4
9.6	SPSTM5X10	Screw, Pan, Pozi2, Thdfrm, M 5x 10	2
9.7	W030820	Washer, Flat, Bright, 3/16" X 1/2"X 20 G	2
9.8	W052003	Washer, Flat, Black, 5/16"X1-1/4"X3	4
9.9	W103208	Washer, Flat, Black, 10.5x32x8	4
9.10	WS050216	Washer, Lock, Spring, 5/16"X1/8"X1/16"	4
10		Sub-Assy, Bonnet	1
11	A1210029Z	Link, Adjust, Height, Cut	1
12	A21007120G	Mudguard, Rear, Red	1
13	BHSSM8X25	Screw, Button, Hex Soc, M 8x 25, Pc10.9	1
14	CHSSM6X35	Screw, Cap, Hex_Soc, M_6x_35, Cl12.9	1
15	DEC593	Decal, Cox, Rear	1
16	NHFNM6	Nut, Hex, Flange, Nyloc, M 6, Pc8	12
17	NHFNM8	Nut, Hex, Flange, Nyloc, M 8, Pc8	28
18	NM8NT	Nut, Hex, Nyloc, Thin, M 8, Pc6	1
19	NU204M8	Nut, U, 20x5, 8	2
20	SBHLFM6X16	Screw, Button, Hex, Lrg Flange, M6x16	4
21	SEMSM8X20	Screw, Hex, +Washers, M8x20	2
22	SH1030M	Screw, Hex, M10x 30, Pc8.8	1
23	SHFM6X16	Screw, Hex, Flange, M 6x 16, Pc8.8	5
24	SHFM8X16	Screw, Hex, Flange, M_8x_16, Pc8.8	4
25	SHFM8X20	Screw, Hex, Flange, M 8x 20, Pc8.8	22
26	SPPK6X20	Screw, Pan, Posi3, K 6x 20	2
27	W05M202	Washer, Flat, Black, M 8x 21.0x 2.0	5
28	W08MN	Washer, Flat, Bright, M 8x 17x1, 2	12
29	W041018	Washer, Flat, Bright, 1/4"X5/8"X18g	4
30	WS050216	Washer, Lock, Spring, 5/16"X1/8"X1/16"	8

EXPLODED VIEW - BODY COMPONENTS PLUS & PRO

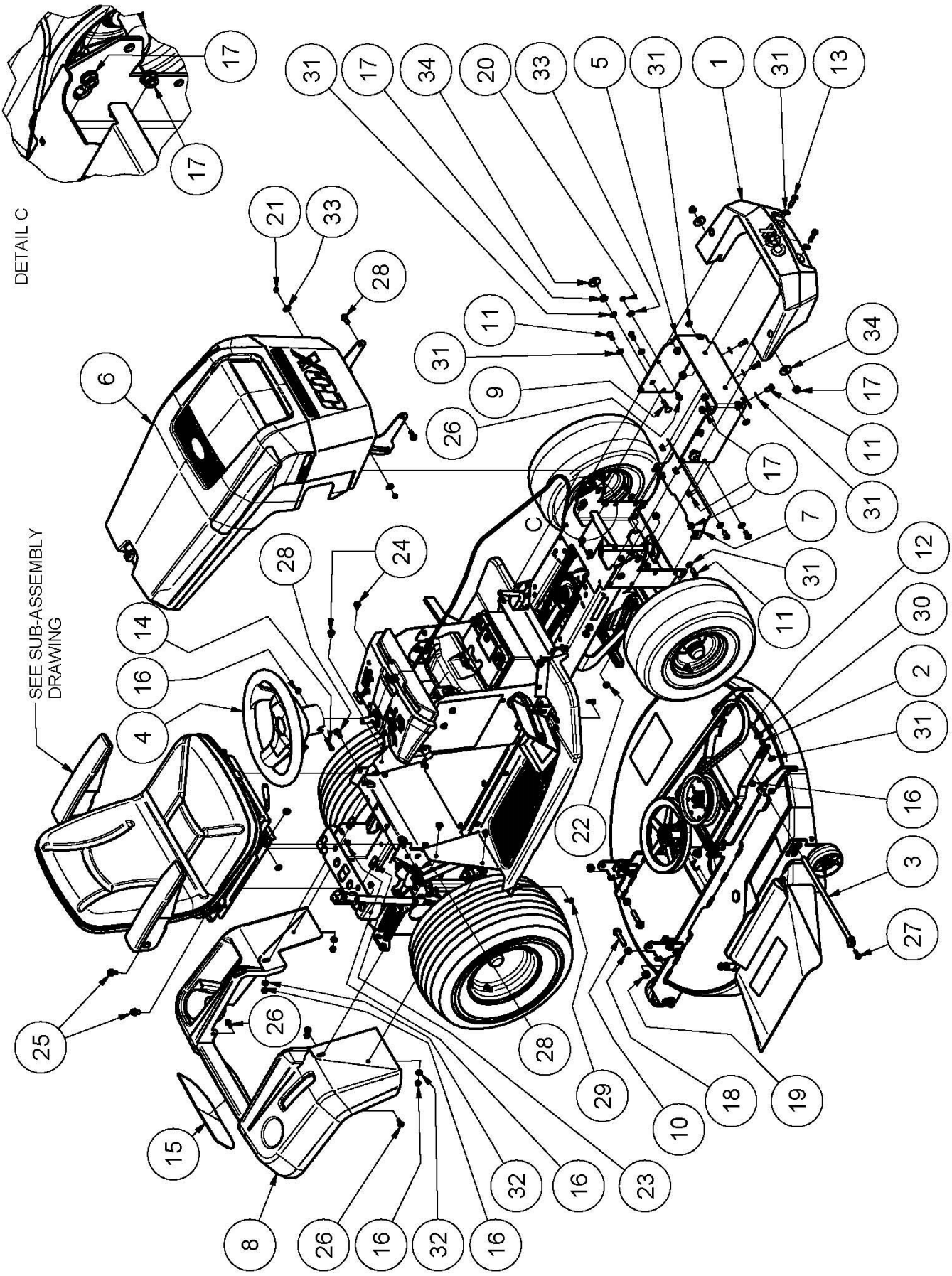

PARTS LIST - BODY COMPONENTS PLUS & PRO

ITEM	PART NUMBER	DESCRIPTION	QTY
1	A163014	Bumper, Front, Black	1
2	A210006Z	Sleeve, 8.3x12x8	1
3	A210014Z	Pin, 12.0 Dia, L=327	1
4	A210032	Wheel, Steering, Dia=335mm	1
5	A214012T	Support, Bumper, Front	1
6		Sub-Assy, Bonnet, Pro	1
7	A214023T	Panel, Shield, Lower	1
8	A21007120G	Mudguard, Rear	1
9	BCHSNM8X35	Bolt, Cup, Sq Neck, M8 X 35 Pc4.6	2
10	BHFM10X1.25X50	Bolt, Hex, Flange, M10x1.25x 50, Pc8.8	2
11	BHSSM8X20	Screw, Button, Hex Soc, M 8x 20, Pc12.9	9
12	BHSSM8X25	Screw, Button, Hex Soc, M 8x 25, Pc10.9	1
13	BHSSM8X35	Screw, Button, Hex Soc, M 8x 35, Pc10.9	2
14	CHSSM6X35	Screw, Cap, Hex_Soc, M_6x_35, Cl12.9	1
15	DEC601	Decal, Cox, Rear, Autolok	1
16	NHFNM6	Nut, Hex, Flange, Nyloc, M 6, Pc8	13
17	NHFNM8	Nut, Hex, Flange, Nyloc, M 8, Pc8	43
18	NHM10X1.25	Nut, Hex, M10x1.25, Pc8	2
19	NHNM10X1.25	Nut, Hex, Nyloc, M10x1.25, Pc8	2
20	NHTm6	Nut, Hex, Plain, Thin, Pc8.8	2
21	NM6NT	Nut, Hex, Nyloc, Thin, M 6, Pc6	2
22	NM8NT	Nut, Hex, Nyloc, Thin, M 8, Pc6	1
23	NU204M8	Nut, U, 20x5, 8	2
24	SBHLFM6X16	Screw, Button, Hex, Lrg Flange, M6x16	4
25	SEMSM8X20	Screw, Hex, +Washers, M8x20	2
26	SHFM6X16	Screw, Hex, Flange, M 6x 16, Pc8.8	7
27	SHFM6X20	Screw, Hex, Flange, M 6x 20, Pc8.8	2
28	SHFM8X20	Screw, Hex, Flange, M 8x 20, Pc8.8	20
29	SPPK6X20	Screw, Pan, Posi3, K 6x 20	2
30	W05M202	Washer, Flat, Black, M 8x 21.0x 2.0	3
31	W08MN	Washer, Flat, Bright, M 8x 17x1, 2	27
32	W041018	Washer, Flat, Bright, 1/4"X5/8"X18g	4
33	W041216	Washer, Flat, Bright, 1/4"X3/4"X16g	4
34	W052003	Washer, Flat, Black, 5/16"X1-1/4"X3	5

PARTS LIST - SEAT & BASE (STOCKMAN PLUS AND PRO)

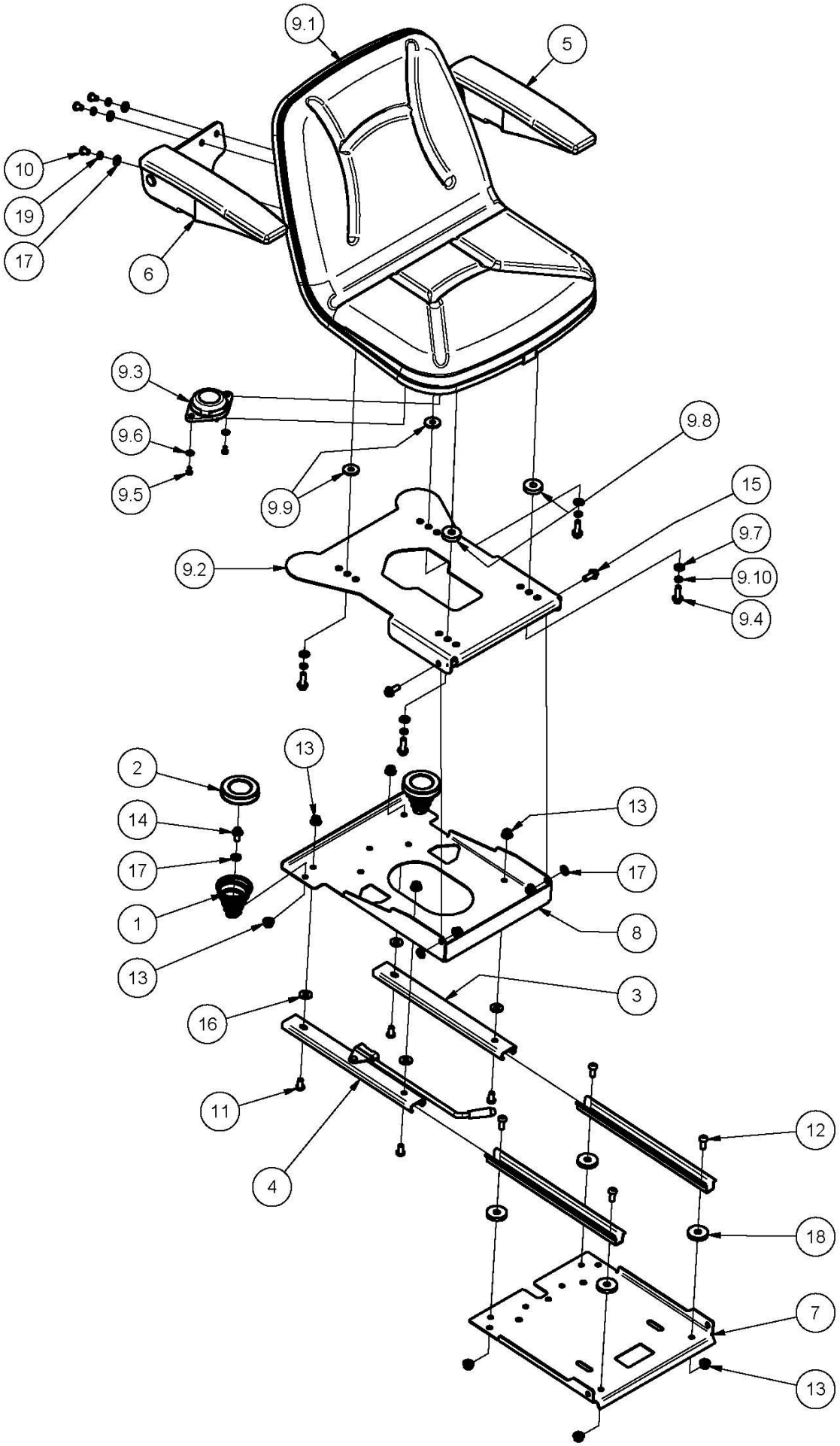

PARTS LIST - SEAT & BASE (STOCKMAN PLUS AND PRO)

ITEM	PART NUMBER	DESCRIPTION	QTY
1	A163060	Spring, Compression, Conical, Seat	2
2	A168231	Cap, Spring, Seat	2
3&4	A172052	Kit, Adjust Seat	1
5&6	A172054	Kit, Armrest, Seat	1
7	A214041T	Panel, Trans Cover	1
8	A214042T	Panel, Seat Slide	1
9		Sub-Assy, Seat, Plus/Pro	1
9.1	A172050	Seat	1
9.2	A214043T	Panel, Mount, Seat	1
9.3	AM16512F	Switch, Seat, Nc, Flange, Bolt Mtg	1
9.4	SHFM8X25	Screw, Hex, Flange, M8x 25, Pc8.8	4
9.5	SPSTM5X10	Screw, Pan, Pozi2, Thdfrm, M 5x 10	2
9.6	W030820	Washer, Flat, Bright, 3/16" X 1/2"X 20 G	2
9.7	W08MN	Washer, Flat, Bright, M 8x 17x1, 2	4
9.8	W103208	Washer, Flat, Black, 10.5x32x8	2
9.9	WSEAT08X27X3	Seat Washer	2
9.10	WSM8X2X2	Washer, Lock, Spring, M 8x2 X2	4
10	BHSSM8X12	Screw, Button, Hex Soc, M 8x 12, Pc10.9,	6
11	BHSSM8X16	Screw, Button, Hex Soc, M 8x 16, Pc10.9	4
12	BHSSM8X20	Screw, Button, Hex Soc, M 8x 20, Pc12.9	4
13	NHFNM8	Nut, Hex, Flange, Nyloc, M 8, Pc8,	12
14	SHFM8X16	Screw, Hex, Flange, M_8x_16, Pc8.8	2
15	SHFM8X20	Screw, Hex, Flange, M 8x 20, Pc8.8	2
16	W05M202	Washer, Flat, Black, M 8x 21.0x 2.0	4
17	W08MN	Washer, Flat, Bright, M 8x 17x1, 2	10
18	W103506	Washer, Flat, Black, 10x35x6	4
19	WSM8X2X2	Washer, Lock, Spring, M 8x2 X2	6

EXPLODED VIEW - BONNET (STOCKMAN)

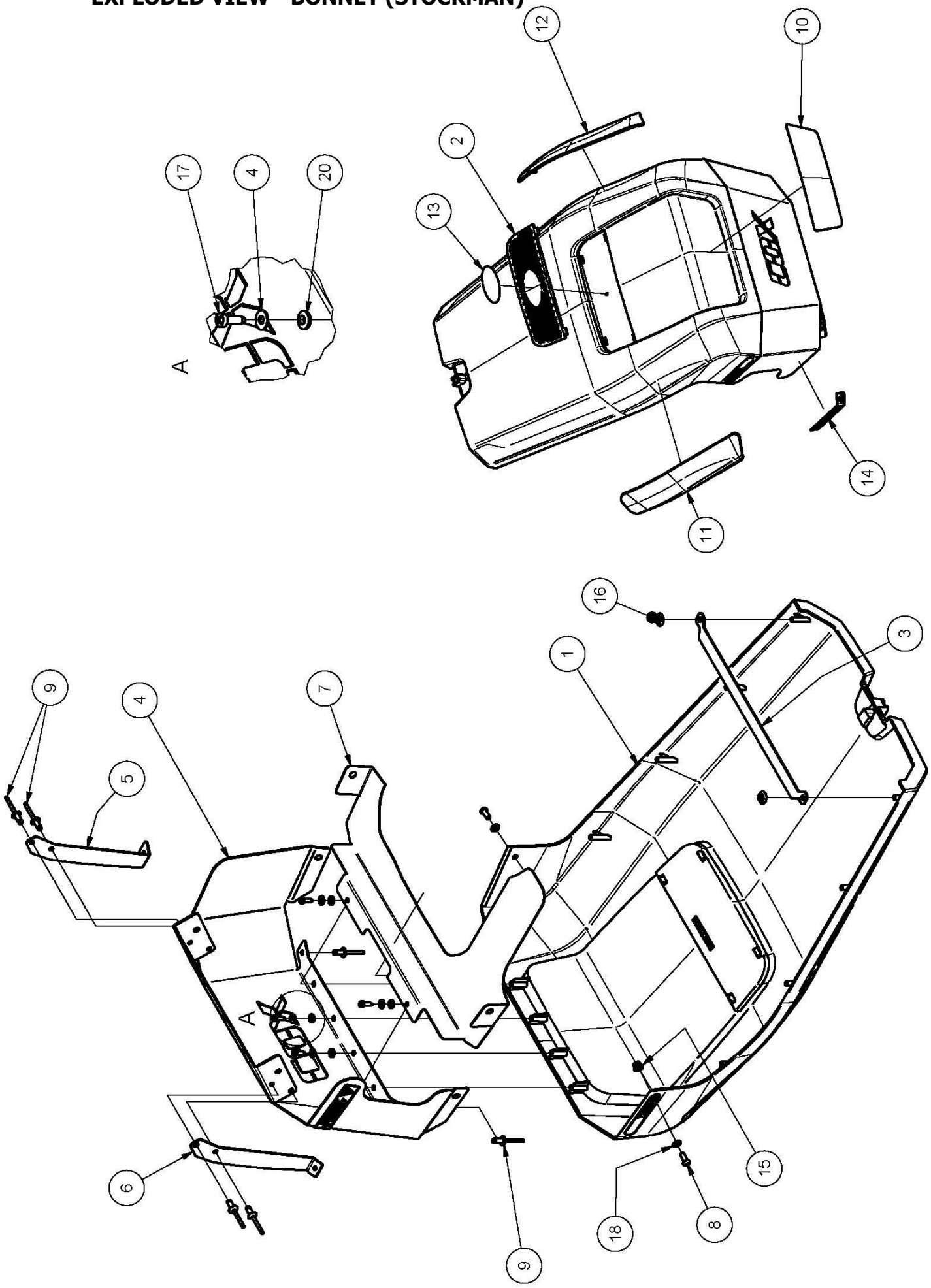

PARTS LIST - BONNET (STOCKMAN)

ITEM	PART NUMBER	DESCRIPTION	QTY
1	A163010	Cowl, Bonnet	1
2	A163018	Grill, Bonnet	1
3	A163046T	Stay, Rear	1
4	A214111S	Nose, Bonnet, Cox	1
5	A214112S	Strut, Nosecone, Left	1
6	A214113S	Strut, Nosecone, Right	1
7	A214141T	Baffle, Air, Hot, Bonnet, COX 16HP (ZONGSHEN)	1
	A214041T	Baffle, Air, Hot, Bonnet, B&S INTEK SERIES	
	A182521T	Baffle, Air, Hot, Bonnet, COX 15HP (LONCIN)	
8	BHSSM6X16	Screw, Button, Hex Soc, M 6x 16, Pc10.9	2
9	BLDR-08125XG	Rivet	6
10	DEC581	Decal, Bonnet, Front, Stockman	1
11	DEC582	Decal, Bonnet, Right, Stockman	1
12	DEC583	Decal, Bonnet, Left, Stockman	1
13	DEC590	Badge, Oval, 85x39, Stockman	1
14	DEC36217E	Decal, Caution, Hot Surface	1
15	NHFNM6	Nut, Hex, Flange, Nyloc, M 6, Pc8	2
16	NTF6.3	Nut, Hex Wash, Self-Thread, 6.3	2
17	SPPK5X16	Screw, Pan, Pozi2, K 5x 16	4
18	W06MN	Washer, Flat, Bright, M 6x 12.5x1.2	3
19	W030820	Washer, Flat, Bright, 3/16" X 1/2"X 20 G	4
20	WSR12	Washer, Seal, EPDM Rubber	4

EXPLODED VIEW - BONNET (STOCKMAN PLUS)

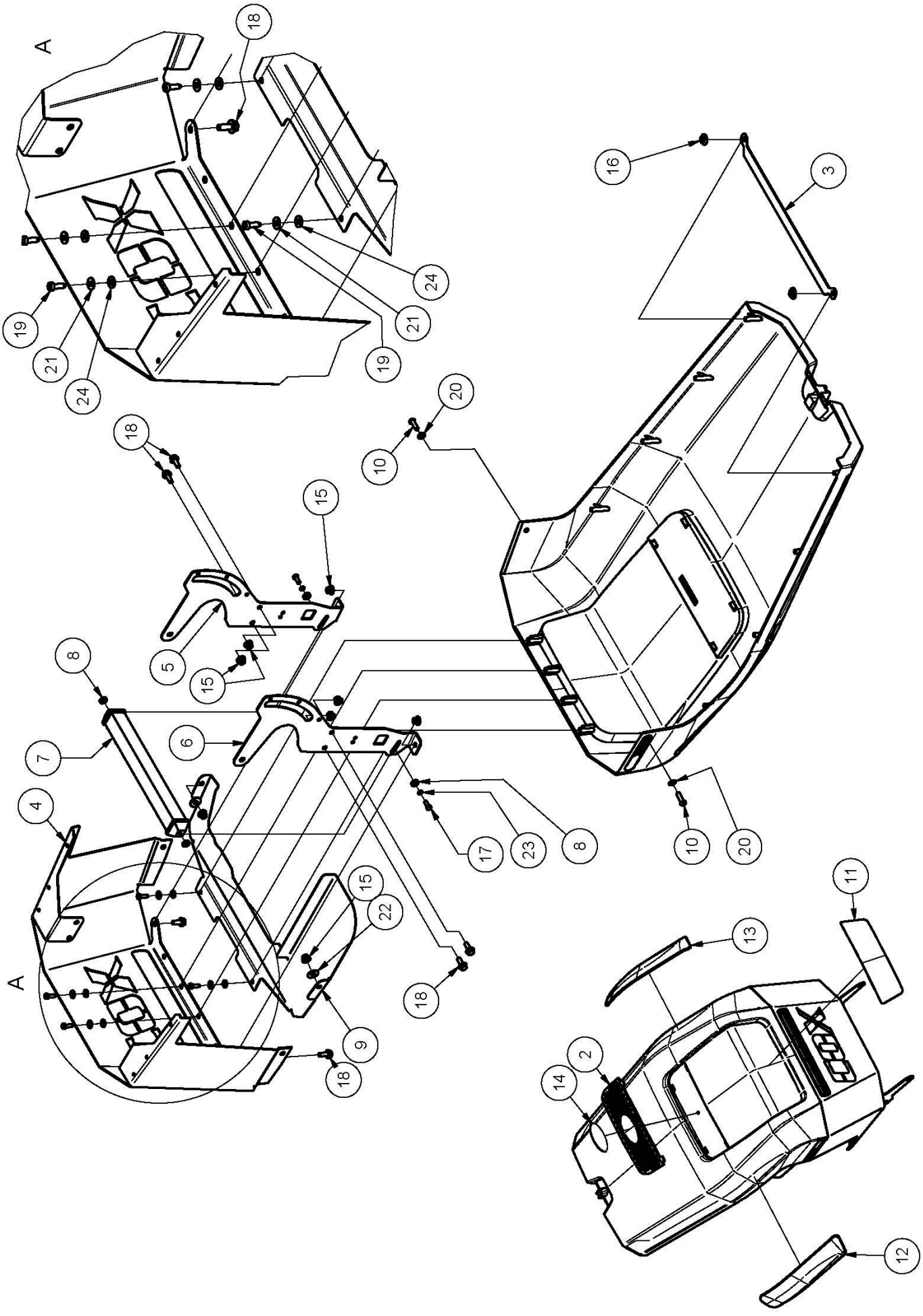

PARTS LIST - BONNET (STOCKMAN PLUS)

ITEM	PART NUMBER	DESCRIPTION	QTY
1	A163010	Cowl, Bonnet	1
2	A163018	Grill, Bonnet	1
3	A163046T	Stay, Rear	1
4	A214011S	Nosecone	1
5	A214013T	Hinge, Bonnet, Left	1
6	A214014T	Hinge, Bonnet, Right	1
7	A214017	Headlight, Led, Bar, L=284, 12v, 26w	1
8	A214018Z	Washer, Flat, Black, M 5x 13x3.0	4
9	A214131T	Baffle, Bonnet, XP550	1
	A214021T	Baffle, Bonnet, B&S Single	
10	BHSSM6X20	Screw, Button, Hex Soc, M 6x 20, Pc10.9	2
11	DEC581	Decal, Bonnet, Front, Stockman	1
12	DEC582	Decal, Bonnet, Side, Right	1
13	DEC583	Decal, Bonnet, Side, Left	1
14	DEC591	Badge, Oval, 85x39, Stockman PLUS	1
15	NHFNM6	Nut, Hex, Flange, Nyloc, M 6, Pc8	8
16	NTF6.3	Nut, Hex Wash, Self-Thread, 6.3	2
17	SH0512M	Screw, Hex, M 5x 12, PC4.6	2
18	SHFM6X16	Screw, Hex, Flange, M 6x 16, Pc8.8	6
19	SPPK5X16	Screw, Pan, Pozi2, K 5x 16	4
20	W06MN	Washer, Flat, Bright, M 6x 12.5x1.2	2
21	W030820	Washer, Flat, Bright, 3/16" X 1/2"X 20 G	4
22	W041216	Washer, Flat, Bright, 1/4"X3/4"X16g	2
23	WSM5X1.5X1.1	Washer, Lock, Spring, M 5x 1.5x 1.1	2
24	WSR12	Washer, Seal, EPDM Rubber	4

EXPLODED VIEW - BONNET (STOCKMAN PRO)

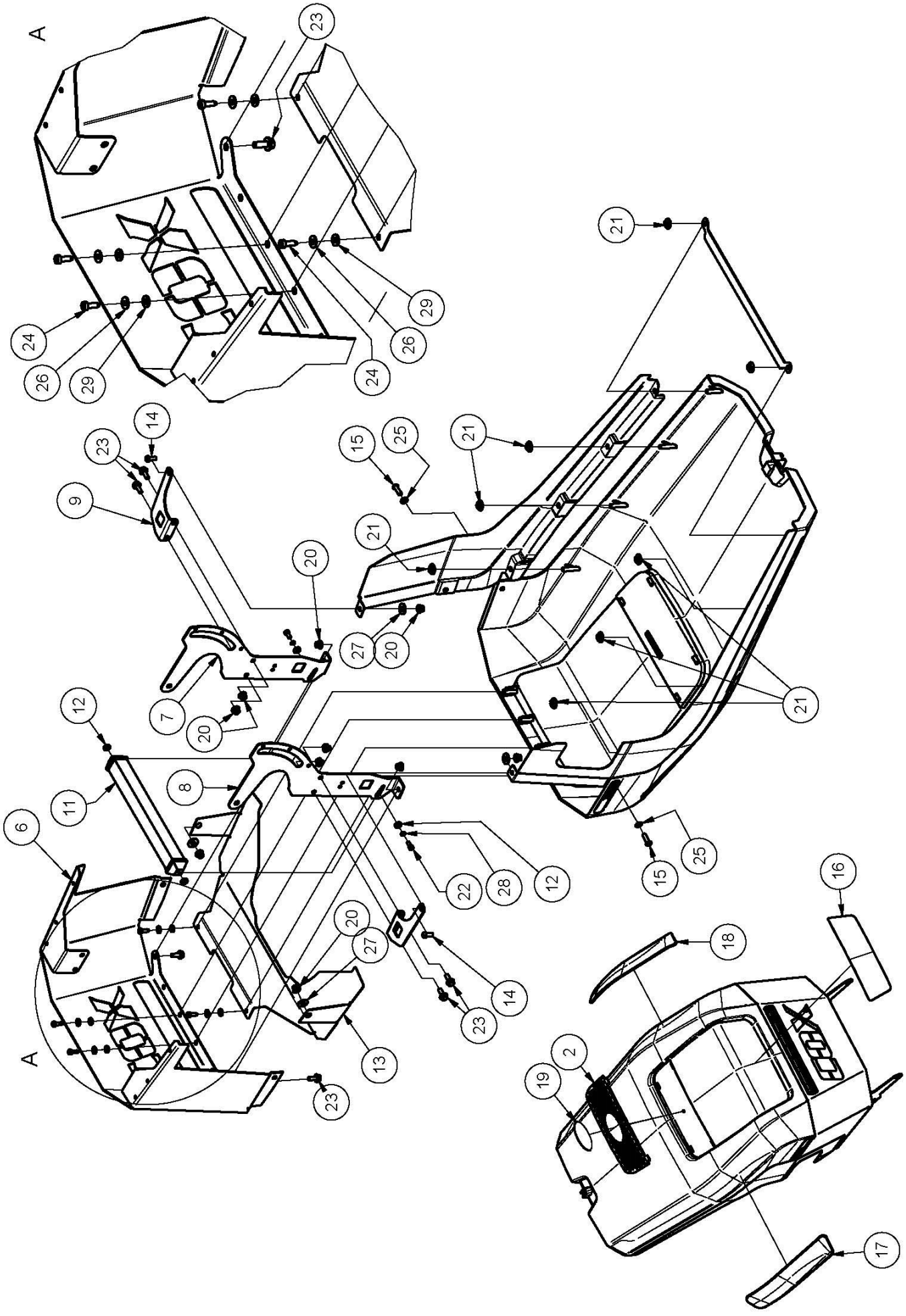

PARTS LIST - BONNET (STOCKMAN PRO)

ITEM	PART NUMBER	DESCRIPTION	QTY
1	A163010	Cowl, Bonnet	1
2	A163018	Grill, Bonnet	1
3	A163021B	Mesh, Side, Left, Black	1
4	A163023B	Mesh, Side, Right, Black	1
5	A163046T	Stay, Rear	1
6	A214011S	Nosecone, Stockman	1
7	A214013T	Hinge, Bonnet, Left	1
8	A214014T	Hinge, Bonnet, Right	1
9	A214015S	Support, Mesh, Bonnet, Left	1
10	A214016S	Support, Mesh, Bonnet, Right	1
11	A214017	Headlight, Led, Bar, L=284, 12v, 26w	1
12	A214018Z	Washer, Flat, Black, M 5x 13x3.0	4
13	A214019T	Baffle, Bonnet, B&S VTWIN	1
14	BHSSM6X16	Screw, Button, Hex Soc, M 6x 16, Pc10.9	2
15	BHSSM6X20	Screw, Button, Hex Soc, M 6x 20, Pc10.9	2
16	DEC581	Decal, Bonnet, Front, Stockman	1
17	DEC582	Decal, Bonnet, Side, Right	1
18	DEC583	Decal, Bonnet, Side, Left	1
19	DEC592	Badge, Oval, 85x39, Stockman Pro	1
20	NHFNM6	Nut, Hex, Flange, Nyloc, M 6, Pc8	10
21	NTF6.3	Nut, Hex Wash, Self-Thread, 6.3	8
22	SH0512M	Screw, Hex, M 5x 12, PC4.6	2
23	SHFM6X16	Screw, Hex, Flange, M 6x 16, Pc8.8	6
24	SPPK5X16	Screw, Pan, Pozi2, K 5x 16	4
25	W06MN	Washer, Flat, Bright, M 6x 12.5x1.2	2
26	W030820	Washer, Flat, Bright, 3/16" X 1/2"X 20 G	4
27	W041216	Washer, Flat, Bright, 1/4"X3/4"X16g	4
28	WSM5X1.5X1.1	Washer, Lock, Spring, M 5x 1.5x 1.1	2
29	WSR12	Washer, Seal, EPDM Rubber	4

EXPLODED VIEW - WHEELS AND ANCILLARIES (STOCKMAN)

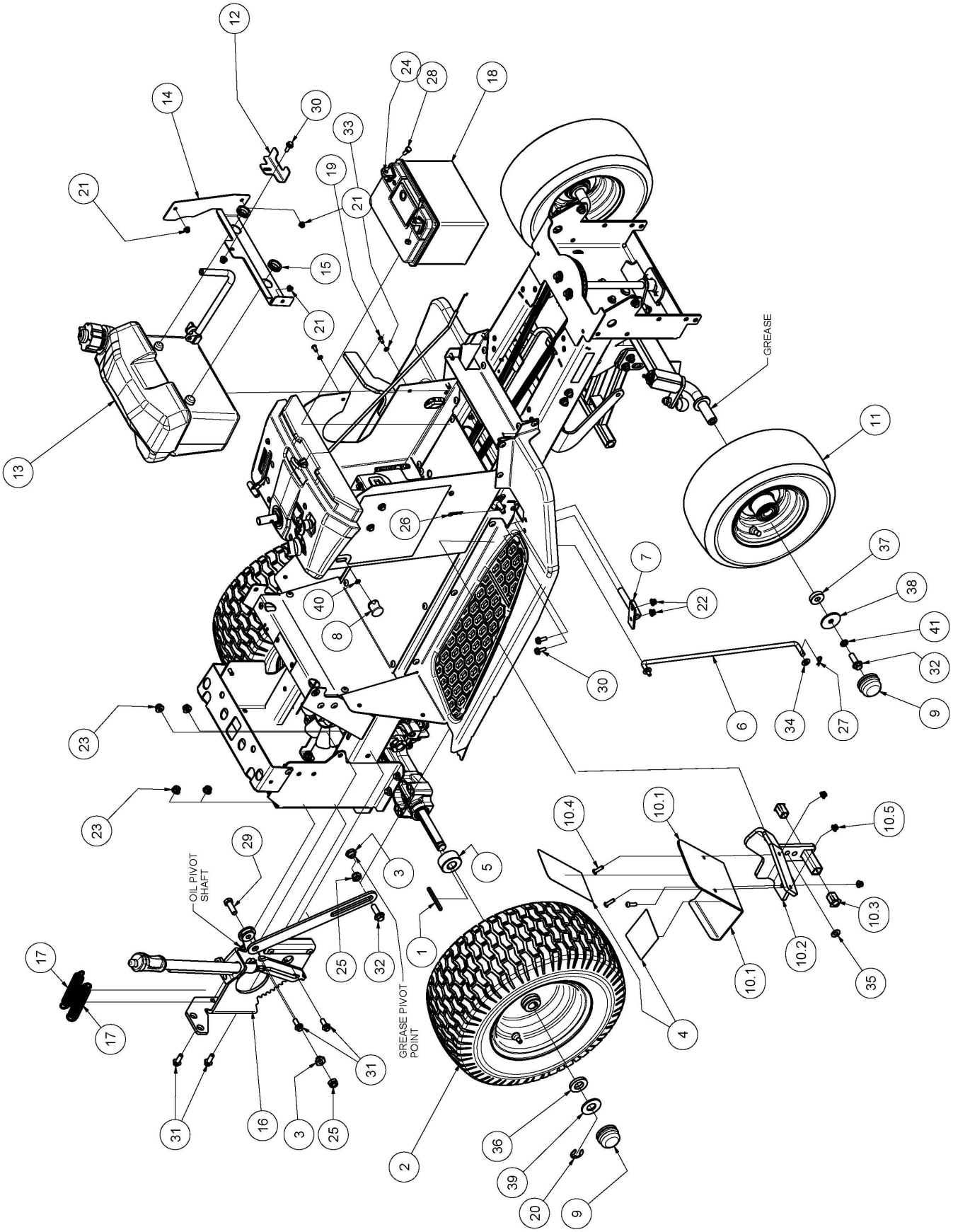

PARTS LIST - WHEELS AND ANCILLARIES (STOCKMAN)

ITEM	PART NUMBER	DESCRIPTION	QTY
1	14126	Key, 4.76x 4.76x 63.5	2
2	A116139	Wheel, 16x650-8	2
3	A168219Z	Bush, 13x6, M10x1.5, L=11	2
4	A168223	Non-Skid, Pedal, Drive	1
5	A179217Z	Sleeve, Thrust, Wheel, 19.5x45x21.5	2
6	A210004Z	Fab, Rod, Brake, Park, M6	1
7	A210005Z	Pivot, Pedal, Drive	1
8	A210034	Knob, Plastic, M6	1
9	A210057	Cap, Wheel, Rubber	4
10		Sub-Assy, Pedal, Drive, Dia=12	1
10.1	A182103T	Rest, Foot, Pedal, Drive, Hydro	1
10.2	A210121T	Lever, Pedal, Drive	1
10.3	A210122	Bush, Sq, 20x20x2.0, Id=12.4	2
10.4	BHSSM6X20	Screw, Button, Hex Soc, M 6x 20, Pc10.9	3
10.5	NHFNM6	Nut, Hex, Flange, Nyloc, M 6, Pc8	3
11	A210125	Wheel, 13x5.00	2
12	A210143S	Bracket, Clamp, Battery	1
13		Sub-Assy, Tank, Fuel, 5.5l, A21019l	1
14	A210231S	Bracket, Fuel Tank	1
15	A210232	Grommet, Rubber, 20.5x24.5x1.6	2
16	A21001622A	Mechanism, Adjuster, Height, Cut, Short	1
17	AM040	Spring Extension, Cutter Belt	2
18		Battery, Automotive, 12v, CMFU1, 9PL, 240CCA	1
19	BHSSM5X12	Screw, Button, Hex Soc, M 5 X 12, Pc10.9	5
20	C02	Circlip	2
21	NHFNM5	Nut, Hex, Flange, Nyloc, M 5, Pc8	5
22	NHFNM6	Nut, Hex, Flange, Nyloc, M 6, Pc8	12
23	NHFNM8	Nut, Hex, Flange, Nyloc, M 8, Pc8	28
24	NHM6	Nut, Hex, M 6, Pc5	2
25	NM10NT	Nut, Hex, Nyloc, Thin, M10, Pc6	4
26	RP01	Pin, 'R'	2
27	RP04	Pin, 'R'	3
28	SH0616M	Screw, Hex, M 6x 16, Pc4.6	2
29	SH1030M	Screw, Hex, M10x 30, Pc8.8	1
30	SHFM6X16	Screw, Hex, Flange, M 6x 16, Pc8.8	5
31	SHFM8X20	Screw, Hex, Flange, M 8x 20, Pc8.8	22
32	SHFM10X1.25X30	Screw, Hex, Flange, M10x1.25x 30, Pc8.8	3
33	W05MN	Washer, Flat, Bright, M 5x 10x1.0	3
34	W08MN	Washer, Flat, Bright, M 8x 17x1, 2	12
35	W061216	Washer, Flat, Bright, 3/8"X3/4"X16g	2
36	W203806	Washer, Flat, 20x38x6	2
37	W301008	Spacer, Flat, Od30, Id10, T8.0	2
38	W431003	Washer, Flat, Od43, Id10, T3.0	2
39	W432003	Washer, Flat, 43x20x3	2
40	WLTEM6	Washer, Lock, Toothed, Ext, M6	1
41	WS06081.5	Washer, Lock, Spring, 3/8"X1/8"X3/32"	2

EXPLODED VIEW - WHEELS AND ANCILLARIES (STOCKMAN PLUS AND PRO)

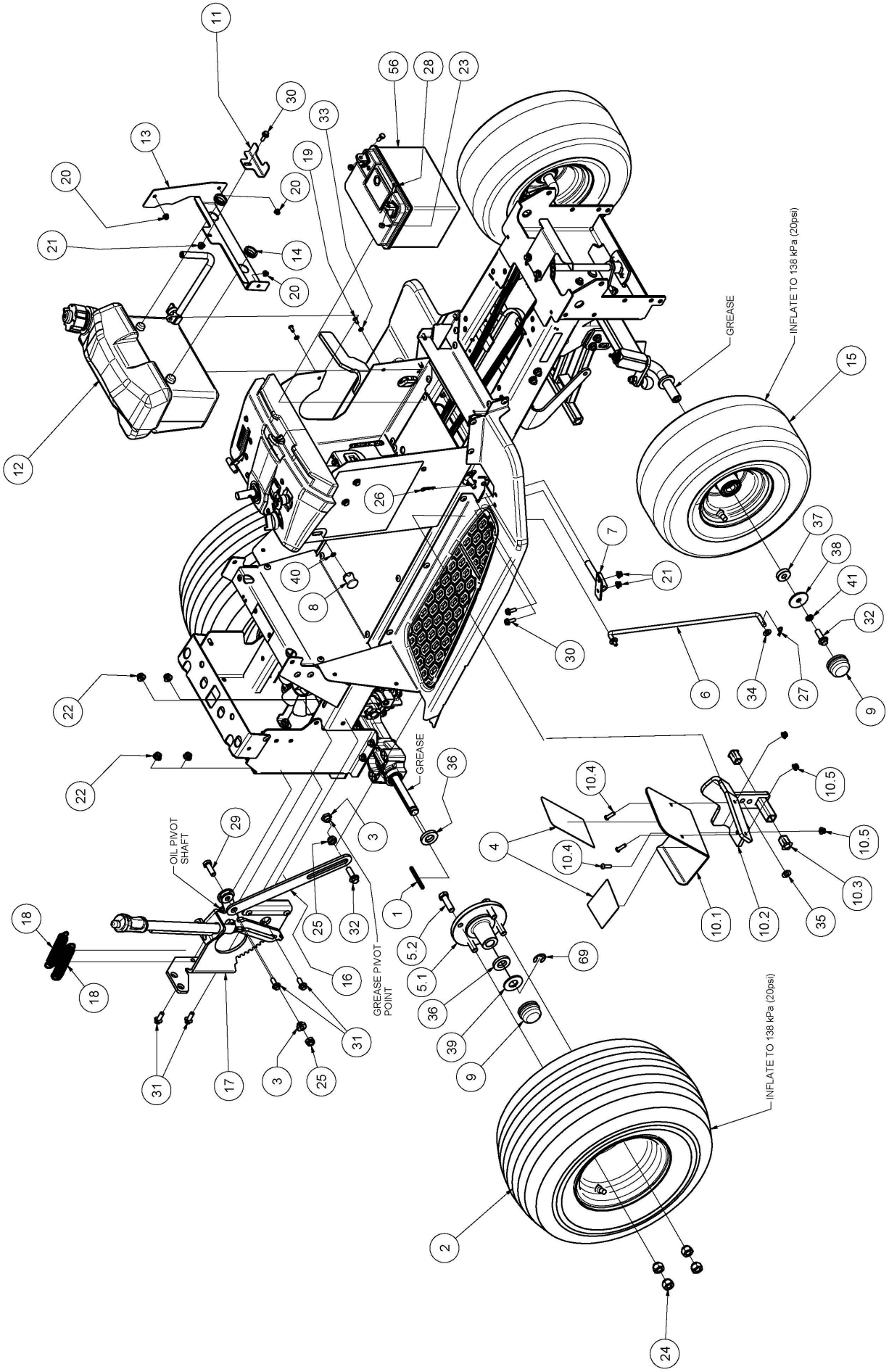

PARTS LIST - WHEELS AND ANCILLARIES (STOCKMAN PLUS AND PRO)

ITEM	PART NUMBER	DESCRIPTION	QTY
1	14126	Key, 4.76x 4.76x 63.5	2
2	A120865TPC	Wheel, 18x950 (Pro Model)	2
	A214212	Wheel, 18x850 (Plus Model)	
2a	TT18X950-8SS	Tyre, 18x 9.50- 8, 4ply, Tubeless (Pro Model)	
	TT18X850-8SS	Tyre, 18x 8.50- 8, 4ply, Tubeless (Plus Model)	
	STU18X850-8SS	Tube, 18x 8.50/ 9.50- 8, Tr13, Optional	
3	A168219Z	Bush, 13x6, M10x1.5, L=11	2
4	A168223	Non-Skid, Pedal, Drive	1
5		Sub-Assy, Adaptor, Wheel, 4@4", Shaft, 3/4"	2
5.1	A169205	Adaptor, Wheel	1
5.2	SH1240M1.5	Screw, Hex, M12x1.5x 40, Pc8.8	4
6	A210004Z	Fab, Rod, Brake, Park	1
7	A210005Z	Pivot, Pedal, Drive	1
8	A210034	Knob, Plastic	1
9	A210057	Cap, Wheel, Rubber	4
10		Sub-Assy, Pedal, Drive	1
10.1	A182103T	Rest, Foot, Pedal, Drive, Hydro	1
10.2	A210121T	Lever, Pedal, Drive	1
10.3	A210122	Bush, Sq, 20x20x2.0, Id=12.4	2
10.4	BHSSM6X20	Screw, Button, Hex Soc, M 6x 20, Pc10.9	3
10.5	NHFNM6	Nut, Hex, Flange, Nyloc, M 6, Pc8	3
11	A210143S	Bracket, Clamp, Battery	1
12		Sub-Assy, Tank, Fuel, 5.5l, A21019l	1
13	A210231S	Bracket, Fuel Tank	1
14	A210232	Grommet, Rubber	2
15	A214108	Wheel, 15x600	2
	TT600X698A	Tyre, 15x6.00-6	
	STU600X6	Tube, 15x 6.00- 6, Optional	
16	A210029Z	Link, Adjust, Height, Cut	1
17	A21001622A	Mechanism, Adjuster, Height, Cut, Short	1
18	AM040	Spring Extension, Cutter Belt	2
19	BHSSM5X12	Screw, Button, Hex Soc, M 5 X 12, Pc10.9	5
20	NHFNM5	Nut, Hex, Flange, Nyloc, M 5, Pc8	5
21	NHFNM6	Nut, Hex, Flange, Nyloc, M 6, Pc8	13
22	NHFNM8	Nut, Hex, Flange, Nyloc, M 8, Pc8	43
23	NHM6	Nut, Hex, M 6, Pc5	3
24	NHWM12X1.5	Nut, Hex, Wheelm12x1.5, 60 Deg	8
25	NM10NT	Nut, Hex, Nyloc, Thin, M10, Pc6	4
26	RP01	Pin	2
27	RP04	Pin	2
28	SH0616M	Screw, Hex, M 6x 16, Pc4.6	2
29	SH1030M	Screw, Hex, M10x 30, Pc8.8	1
30	SHFM6X16	Screw, Hex, Flange, M 6x 16, Pc8.8	7
31	SHFM8X20	Screw, Hex, Flange, M 8x 20, Pc8.8	20
32	SHFM10X1.25X30	Screw, Hex, Flange, M10x1.25x 30, Pc8.8	3
33	W05MN	Washer, Flat, Bright, M 5x 10x1.0	3
34	W08MN	Washer, Flat, Bright, M 8x 17x1, 2	27
35	W061216	Washer, Flat, Bright, 3/8"X3/4"X16g	2
36	W203806	Washer, Flat	4
37	W301008	Spacer, Flat	2
38	W431003	Washer, Flat	2
39	W432003	Washer, Flat	2
40	WLTEM6	Washer, Lock, Toothed, Ext, M6	1
41	WS06081.5	Washer, Lock, Spring, 3/8"X1/8"X3/32"	2

EXPLODED VIEW - CUTTER HEIGHT ADJUSTMENT LEVER

ITEM	PART NUMBER	DESCRIPTION	QTY
1	A210019Z	Bracket, Adjuster, Height, Cut	1
2	A210027Z	Rod, Push, M 6, L=505	1
3	A210028Z	Rod, Adjust, Height, Cut	1
4	A210030	Grip, Handle, Lift	1
5	A210033	Button, Plastic, Black	1
6	AM012	Spring, Compression, Pawl Push Rod	1
7	NHCM6X18	Nut, Hex, Coupling, M 6, L=18	1
8	NHM6	Nut, Hex, M 6, Pc5	2
9	RP04	Pin, 'R', Steel, 1.4x 25	1
10	W06MN	Washer, Flat, Bright, M 6x 12.5x1.2	1
11	W081616M	Washer, Flat, Bright, M 8x16x1.6	1

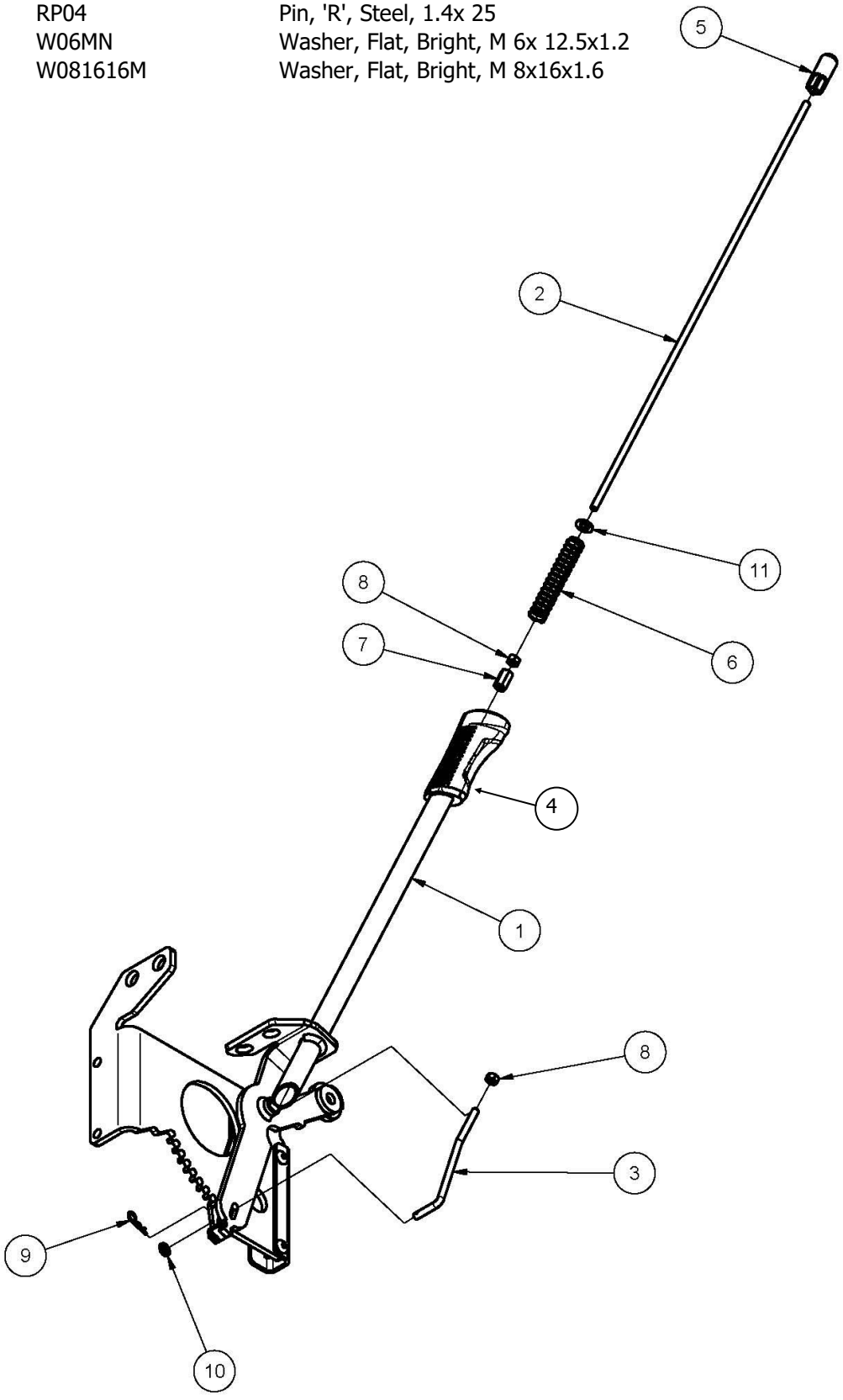

MANUAL CHOKE CONTROL CONFIGURATION

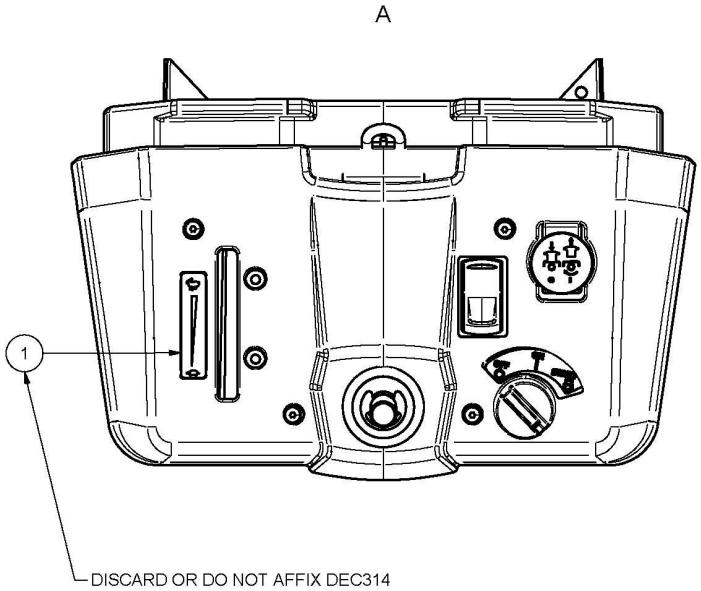

MANUAL CHOKE CONTROL MOUNTING LOCATION. COAT HOLE WITH COX FLAME RED PAINT AFTER DRILLING.

USE COX P/N A203187 FOR COX 24HP V-TWIN ENGINE MANUAL CHOKE CONTROL

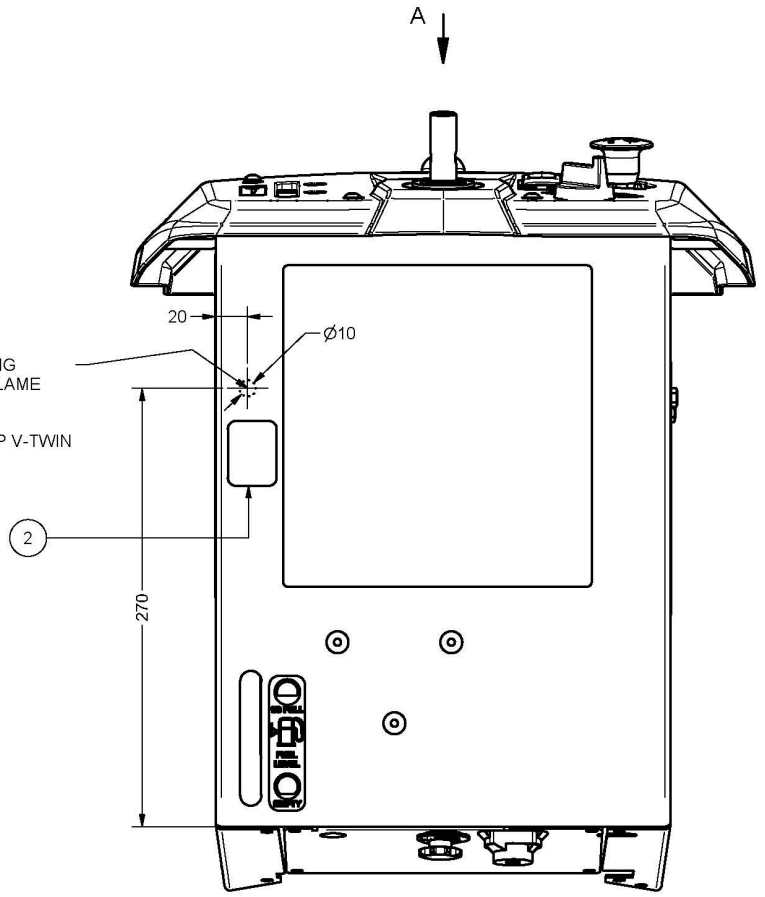

1	DEC605	DECAL,CONTROL,SPEED,ENGINE,NO CHOKE	1
2	DEC606	DECAL,CONTROL,CHOKE	1

EXPLODED VIEW - CONSOLE COMPONENTS (STOCKMAN)

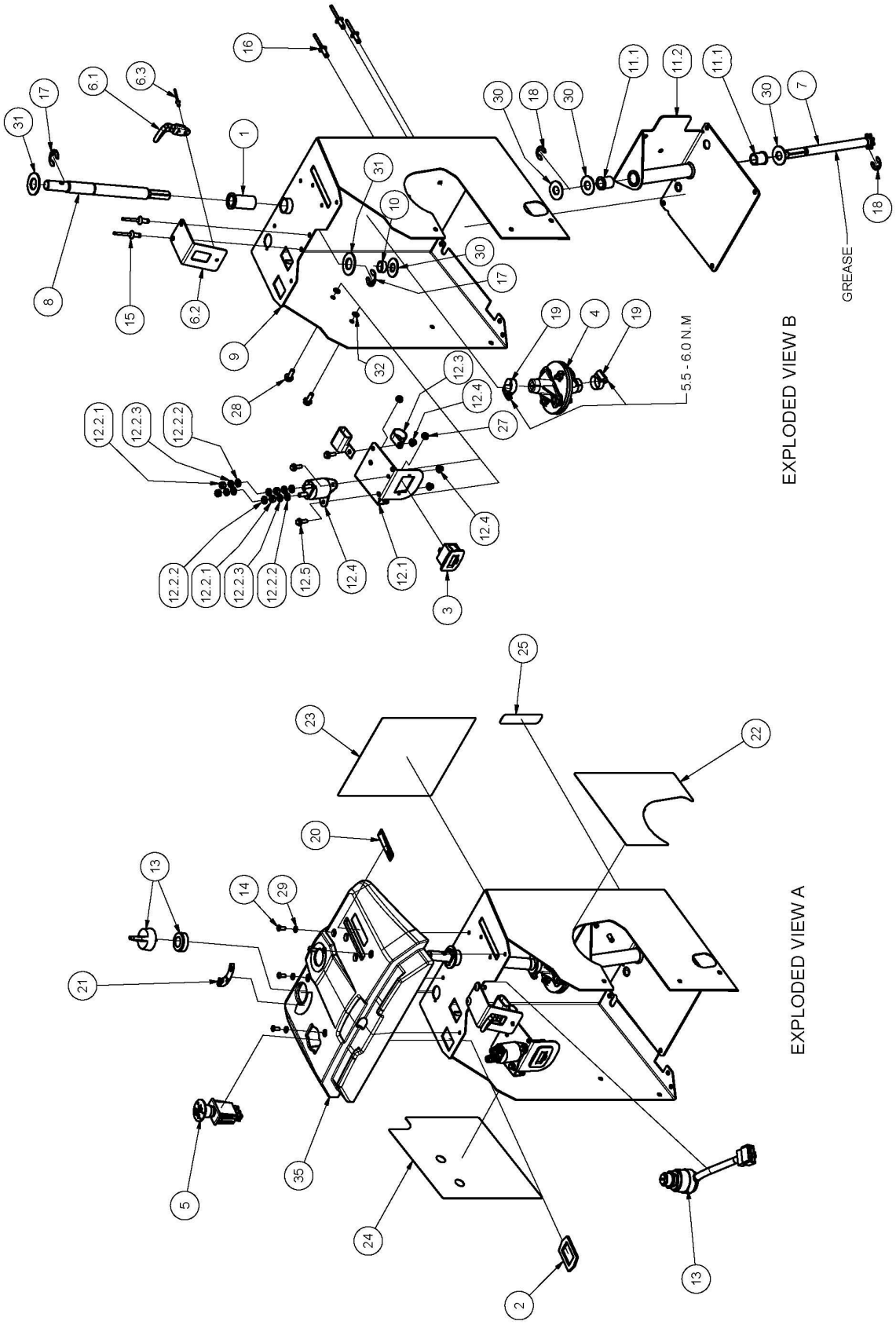

PARTS LIST - CONSOLE COMPONENTS (STOCKMAN)

ITEM	PART NUMBER	DESCRIPTION	QTY
1	13012	Bush, Flanged, Nylon, 19idx22odx45l	1
2	A102190	Ring, Retainer, Switch, PTO	1
3	A163081	Meter, Hour, Magneto-Sensing, 12v, Snap In	1
4		Sub-Assy, Joint, Universal, Steering	1
5	A168117	Switch, PTO, Push-Pull	1
6		Sub-Assy, Bracket, Bunji, Bonnet	1
6.1	96114	Strap, Bonnet, Bunji Loop	1
6.2	A179031S	Bracket, Strap, Bonnet	1
6.3	PR04M4.8	Rivet, Blind, Truss, Mon, 4.0x 8.4, 73ms 5-3	1
7	A210023Z	Shaft, Steering, Lower	1
8	A210025Z	Shaft, Steering, Upper	1
9	A210083S20D	Console	1
10	A210086Z	Spacer, L=7, Id=15, Od=19	1
11		Sub-Assy, Housing, Steering	1
11.1	A120685	Bush, Flanged, 14.3idx19.1od, L=22	2
11.2	A179007T	Housing, Steering, Lower	1
12.1	A168010Z20K	Bracket, Solenoid+Hourmeter	1
12.2	A214088	Solenoid	1
12.2.1	NHM6	Nut, Hex, M 6, Pc5	4
12.2.2	W06MN	Washer, Flat, Bright, M 6x 12.5x1.2	6
12.2.3	WS040816	Washer, Lock, Spring, 1/4"X3/32"X1/16"	4
12.3	CP07	Clip, "P"	1
12.4	NHFNM5	Nut, Hex, Flange, Nyloc, M 5, Pc8	3
12.5	SHFM5X16	Screw, Hex, Flange, M 6x 16, Pc8.8	3
13	A214087	Switch, Key	1
	A210062KEY	Key	1
14	BHSSM5X12	Screw, Button, Hex Soc, M 5 X 12, Pc10.9	4
15	BLDR-08125XG	Rivet, Orlock 3-6.5mm Grip	2
16	BLDR-08145XG	Rivet, Orlock 5-8.5mm Grip	3
17	C02	Circlip, Ext	2
18	C05	Circlip, Ext	2
19	CH06	Clamp	2
20	DEC314	Decal, Control, Speed, Engine	1
21	DEC341	Decal, Switch, Ignition	1
22	DEC584	Decal, Console, Left	1
23	DEC585	Decal, Instruct	1
24	DEC586	Decal, Console, Right	1
25	DEC36317E	Decal, Level, Fuel	1
26	NM5NT	Nut, Hex, Nyloc, Thin, M5, Pc6	4
27	NM6NT	Nut, Hex, Nyloc, Thin, M 6, Pc6	2
28	SHFM6X16	Screw, Hex, Flange, M 6x 16, Pc8.8	2
29	W05MN	Washer, Flat, Bright, M 5x 10x1.0	4
30	W092016	Washer, Flat, Bright, 9/16" X 1+1/4" X 16g	4
31	W122414	Washer, Flat, Bright, 3/4"X1-1/2"X 14g	2
32	WM6S	Washer, Lock, Int Tooth, M 6	2

EXPLODED VIEW - CONSOLE COMPONENTS (STOCKMAN PLUS AND PRO)

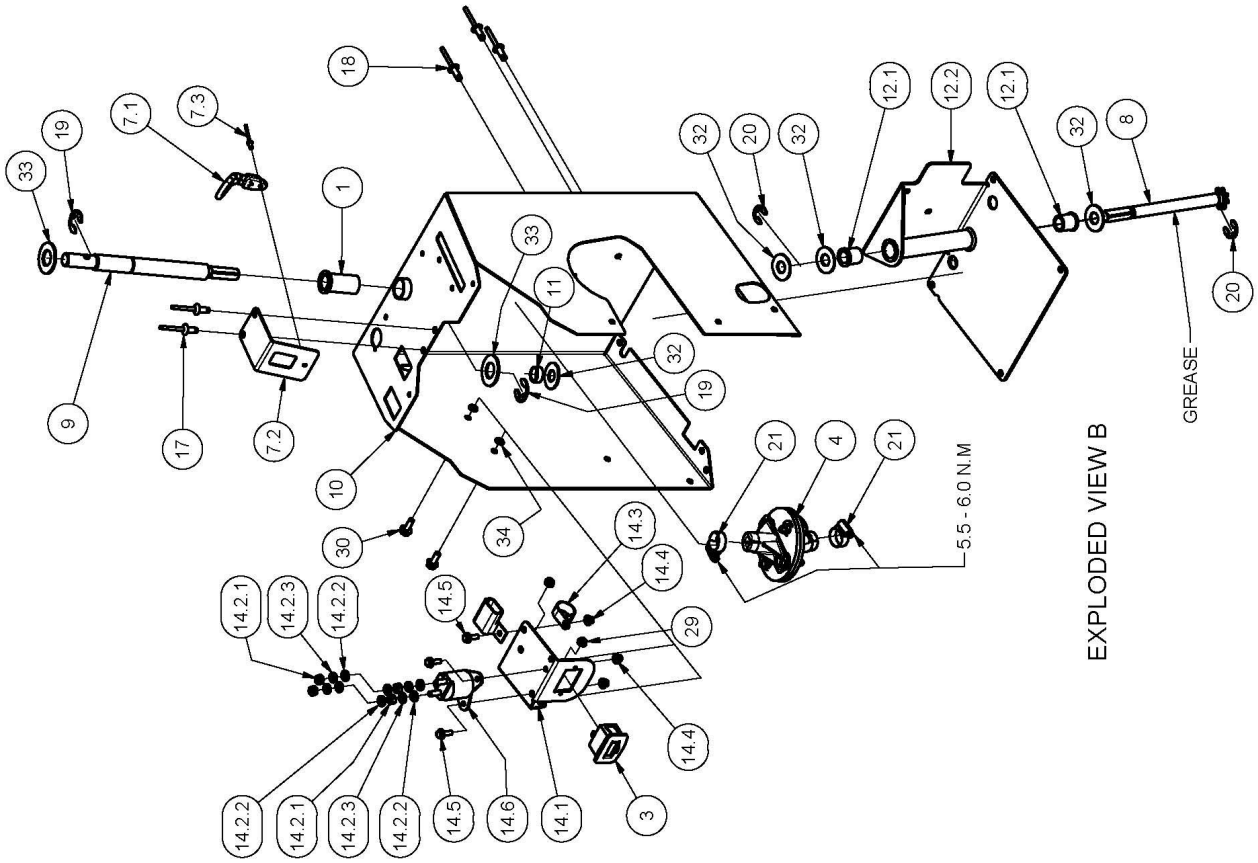

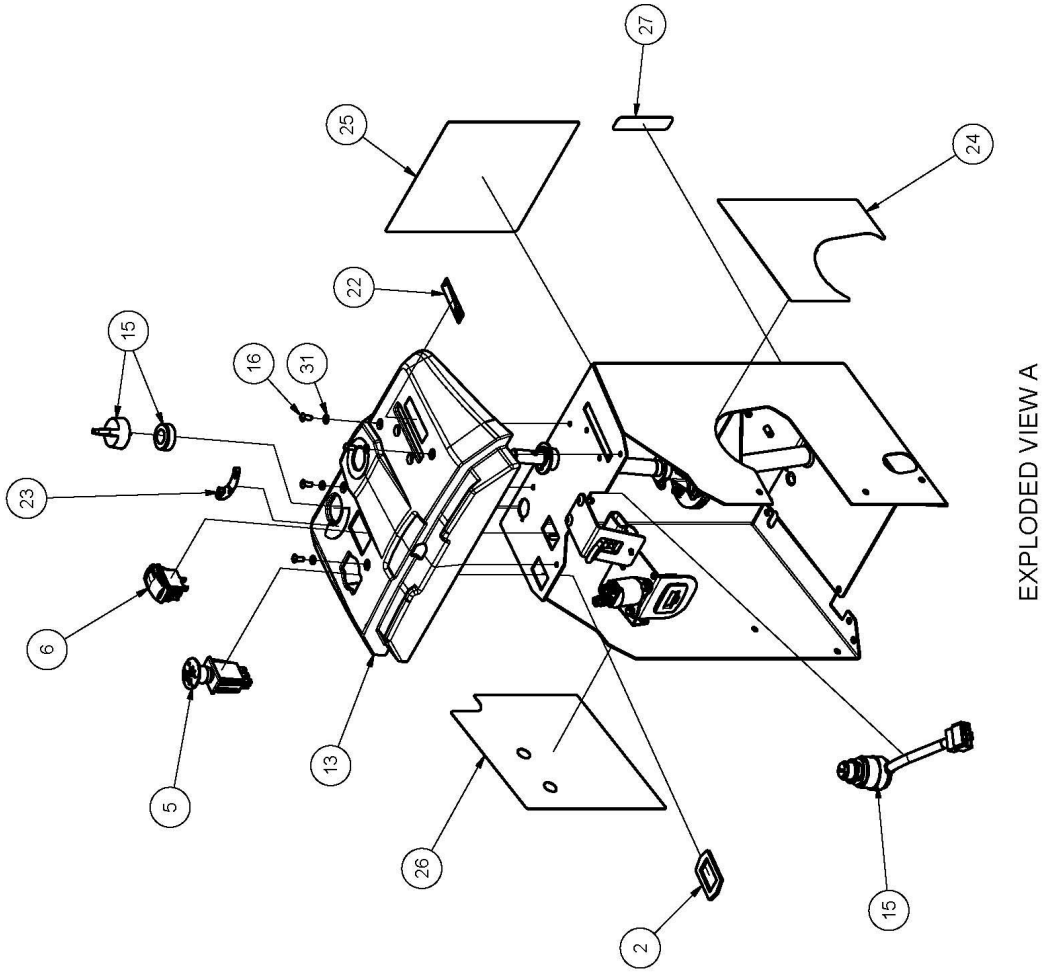

PARTS LIST - CONSOLE COMPONENTS (STOCKMAN PLUS AND PRO)

ITEM	PART NUMBER	DESCRIPTION	QTY
1	13012	Bush, Flanged	1
2	A102190	Ring, Retainer, Switch, PTO	1
3	A163081	Meter, Hour, Magneto-Sensing, 12v, Snap In	1
4		Sub-Assy, Joint, Universal, Steering	1
5	A168117	Switch, PTO, Push-Pull	1
6	A173005	Switch, Rocker	1
7		Sub-Assy, Bracket, Bunji, Bonnet	1
7.1	96114	Strap, Bonnet	1
7.2	A179031S	Bracket, Strap, Bonnet	1
7.3	PR04M4.8	Rivet, Blind, Truss, Mon, 4.0x 8.4, 73ms 5-3	1
8	A210023Z	Shaft, Steering, Lower	1
9	A210025Z	Shaft, Steering, Upper	1
10	A210083S20D	Console	1
11	A210086Z	Spacer, L=7, Id=15, Od=19	1
12		Sub-Assy, Housing, Steering	1
12.1	A120685	Bush, Flanged	2
12.2	A179007T	Housing, Steering, Lower	1
13	A214052	Dash, Console	1
14.1	A168010Z20K	Bracket, Solenoid+Hourmeter	1
14.2	A214088	Solenoid	1
14.2.1	NHM6	Nut, Hex, M 6, Pc5	4
14.2.2	W06MN	Washer, Flat, Bright, M 6x 12.5x1.2, Zn Pl	6
14.2.3	WS040816	Washer, Lock, Spring, 1/4"X3/32"X1/16"	4
14.3	CP07	Clip, "P"	1
14.4	NHFNM5	Nut, Hex, Flange, Nyloc, M 5, Pc8	3
14.5	SHFM5X16	Screw, Hex, Flange, M 6x 16, Pc8.8	3
15	A214087	Switch, Key	1
	A210062KEY	Key	1
16	BHSSM5X12	Screw, Button, Hex Soc, M 5 X 12, Pc10.9	4
17	BLDR-08125XG	Rivet, Orlock 3-6.5mm Grip	2
18	BLDR-08145XG	Rivet, Orlock 5-8.5mm Grip	3
19	C02	Circlip, Ext	2
20	C05	Circlip, Ext	2
21	CH06	Clamp	2
22	DEC314	Decal, Control, Speed, Engine	1
23	DEC341	Decal, Switch, Ignition	1
24	DEC584	Decal, Console, Left, Stockman	1
25	DEC585	Decal, Instruct, Stockman	1
26	DEC586	Decal, Console, Right, Stockman	1
27	DEC36317E	Decal, Level, Fuel	1
28	NM5NT	Nut, Hex, Nyloc, Thin, M5, Pc6	4
29	NM6NT	Nut, Hex, Nyloc, Thin, M 6, Pc6	2
30	SHFM6X16	Screw, Hex, Flange, M 6x 16, Pc8.8	2
31	W05MN	Washer, Flat, Bright, M 5x 10x1.0	4
32	W092016	Washer, Flat, Bright, 9/16" X 1+1/4" X 16g	4
33	W122414	Washer, Flat, Bright, 3/4"X1-1/2"X 14g	2
34	WM6S	Washer, Lock, Int Tooth, M 6	2

PARTS LIST - STEERING COMPONENTS

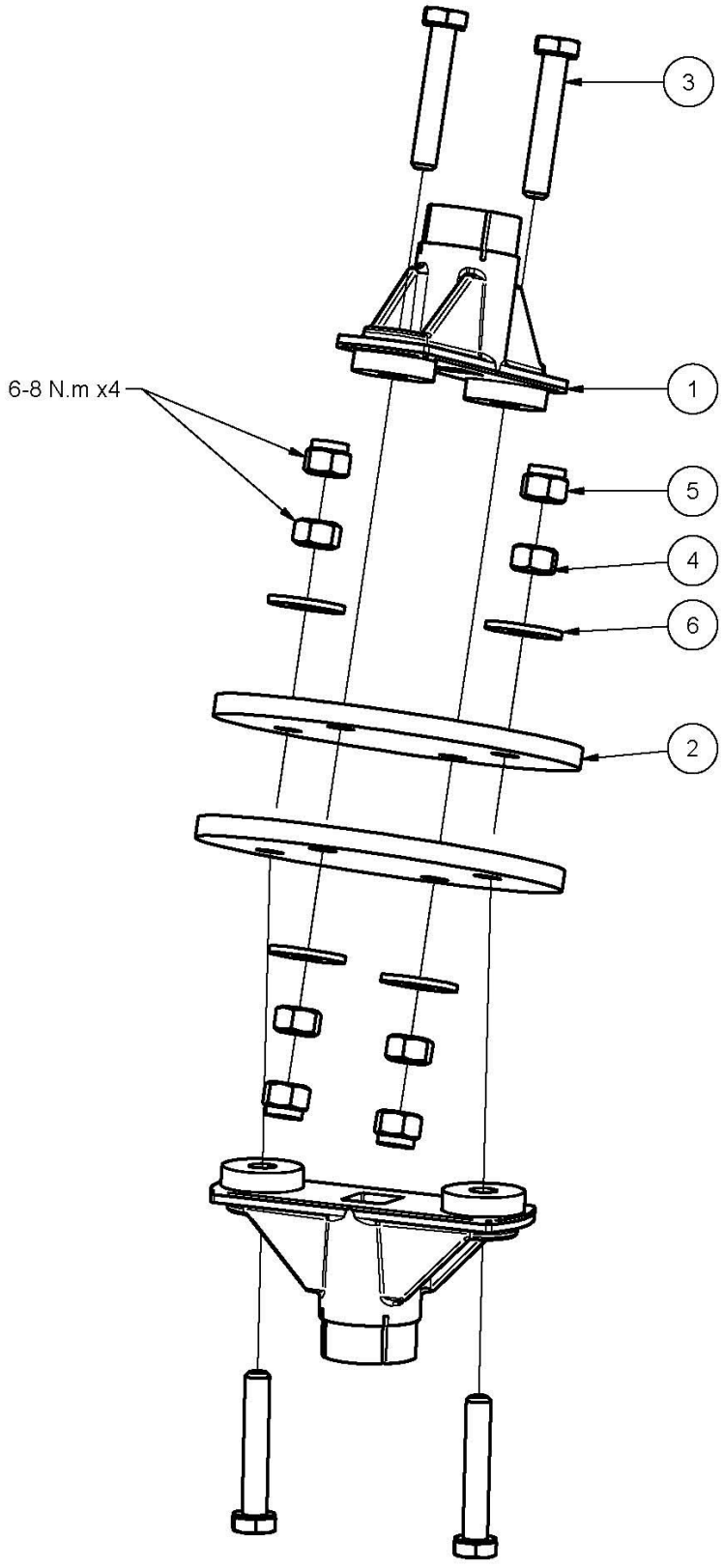

ITEM	PART NUMBER	DESCRIPTION	QTY
1	89097	Steering Shaft Yoke	2
2	AM25399J	Universal Joint	2
3	B0635M	Bolt, Hex, M 6x 35, Pc8.8	4
4	NHM6	Nut, Hex, M 6,Pc5	4
5	NM6N	Nut, Hex, Nyloc, M 6, Pc8	4
6	W041216	Washer, Flat, Bright, 1/4"X3/4"X16g	4

PARTS LIST - FUEL TANK (STRAIGHT FUEL TAP)

Straight Fuel tap with Manual Vent Tank Cap

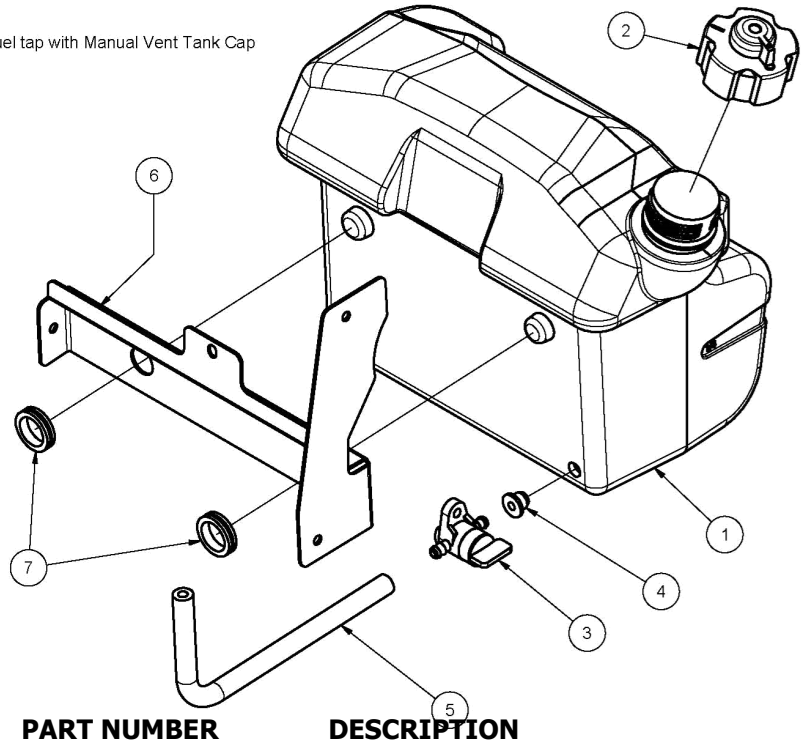

ITEM	PART NUMBER	DESCRIPTION	QTY
1	A210221	Tank, Fuel, 5.5l, Opaque	1
2	A210222	Cap, Fuel, Vented	1
3	A210223	Tap, Petrol, 6mm Barbs	1
4	A210224	Seal, Petrol Tap	1
5	A210225	Line, Fuel, Id=6, L=_255	1
6	A210141S	Bracket, Tank	1
7	A210232	Grommet, Rubber, 20.5x24.5x1.6	2

PARTS LIST - FUEL TANK (90° FUEL TAP)

90° Fuel tap with Manual Vent Tank Cap

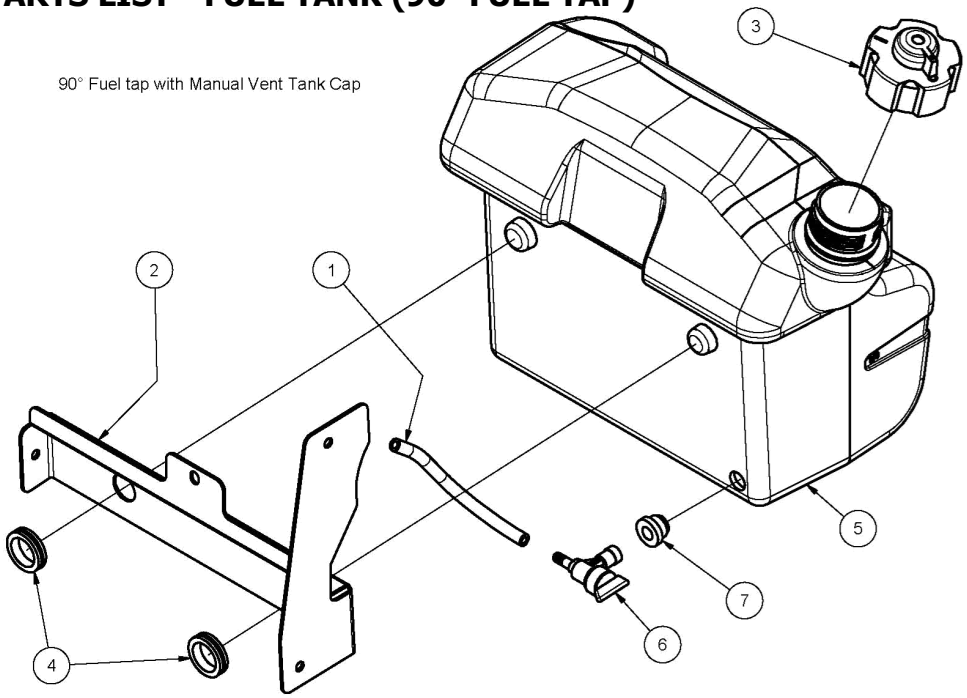

ITEM	PART NUMBER	DESCRIPTION	QTY
1	A120630	Line, Fuel, _5, L=_360	1
2	A210141S	Bracket, Tank	1
3	A210222	Cap, Fuel, Vented	1
4	A210232	Grommet, Rubber, 20.5x24.5x1.6	2
5	A210235	Tank, Fuel, 5.5l, Opaque, 13mm	1
6	AM293	Petrol Tap	1
7	AM294	Grommet, Fuel Tap	1

EXPLODED VIEW - DRIVE BELT TENSIONER ARM

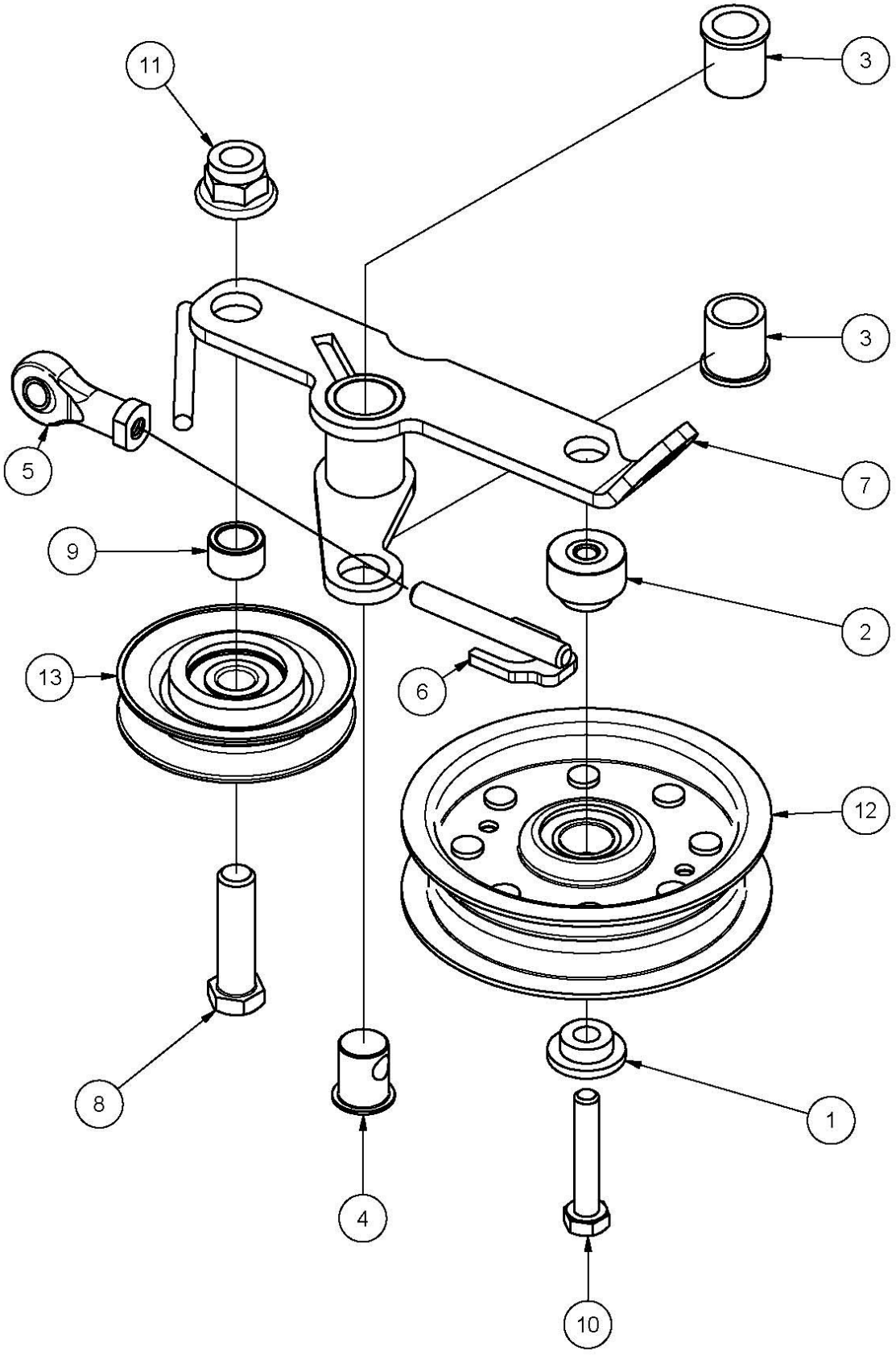

UPDATED DESIGN FITTED TO LATER BATCHES

PARTS LIST - DRIVE BELT TENSIONER ARM

ITEM	PART NUMBER	DESCRIPTION	QTY
1	14025	Boss, Idler, 17dia, 3high	1
2	A102125Z	Boss, Idler, 17 Dia, 12 High	1
3	A120685	Bush, Flanged, Nylon, 14.3idx19.1od, L=22	2
4	A179123Z	Pin, Link	1
5	A210115	End, Rod	1
6	A210118Z	Link, Adjust, Disengage, Drive	1
7	A210243Z	Arm, Tensioner + Disengage, Belt	1
8	A210244	Bolt, Mount, Idler, 12x45, M12x1.25	1
9	A210245Z	Spacer	1
10	B0845M	Bolt, Hex, M 8x 45, Pc8.8znpl	1
11	NHFNM12X1.25	Nut, Hex, Flange, Nyloc, M12x1.25, Pc8	1
12	PIFBB02C	Idler, Flat	1
13	PIVBB04	Idler, VBelt	1

EXPLODED VIEW - ENGINE (15HP) & TRANSAXLE COMPONENTS

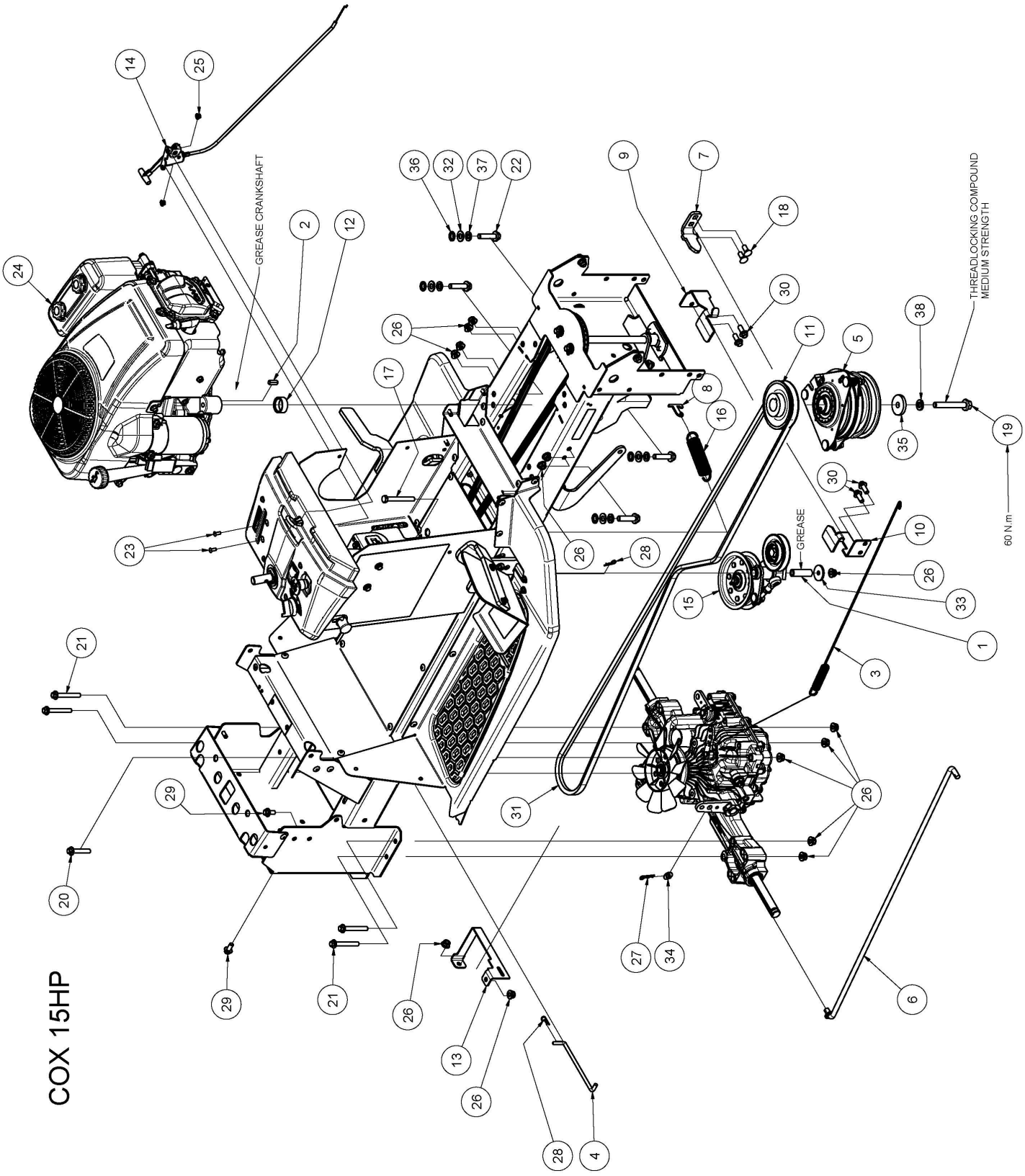

PARTS LIST - ENGINE (15HP) & TRANSAXLE COMPONENTS

ITEM	PART NUMBER	DESCRIPTION	QTY
1	14070	Sleeve, Pivot, Drive Belt Tensioning Arm	1
2	88026	Key, 6.35x 6.35x 20	1
3	A111018	Spring, Extension, Foot Brake	1
4	A169157Z	Link, Disengage	1
5	A179016	Clutch/Brake, Elecmagnet	1
6	A179033Z	Link, Drive	1
7	A179047Z	Restraint, Clutch/Brake	1
8	A179203Z	Lug, Spring	1
9	A179211Z21C	Guide, Belt/Chain, Front, Left	1
10	A179213Z21C	Guide, Belt/Chain, Front, Right	1
11	A179314	Pulley, Engine	1
12	A179315Z	Spacer, Crank Shaft, Powerboss, L=12.5	1
13	A210009Z	Guide, Belt, Rear, Extended	1
14	A210085	Control, 90', Inc Throttle Cable, L= 430	1
15		Sub-Assy, Tension, Belt, Drive	1
16	AM145	Spring, Extension, Weight Compensating	1
17	B0870M	Bolt, Hex, M 8 X 70, Pc8.8	1
18	BCHSNM8X20	Bolt, Cup, Sq Neck, M8 X 20 Pc4.6	2
19	BHFF0748	Bolt, Hex, Flange, Unf, 7/16-20x3	1
20	BHFM8X45	Bolt, Hex, Flange, M 8x 45, Pc8.8	1
21	BHFM8X60	Bolt, Hex, Flange, M 8x 60, Pc8.8	4
22	BHFM10X40	Bolt, Hex, Flange, M10x_40, Pc8.8	4
23	BHSSM5X12	Screw, Button, Hex Soc, M 5 X 12, Pc10.9	5
24	E1501VEP	Engine, 15.0hp, 1cyl, Elec, Powerboss	1
25	NHFNM5	Nut, Hex, Flange, Nyloc, M 5, Pc8	5
26	NHFNM8	Nut, Hex, Flange, Nyloc, M 8, Pc8	28
27	RP01	Pin, 'R'	2
28	RP04	Pin, 'R'	3
29	SHFM8X16	Screw, Hex, Flange, M_8x_16, Pc8.8	4
30	SHFM8X20	Screw, Hex, Flange, M 8x 20, Pc8.8	22
31	V75	Belt, V	1
32	W10MN	Washer, Flat, Bright, M10x 21x1.6	4
33	W052003	Washer, Flat, Black, 5/16"X1-1/4"X3	1
34	W061216	Washer, Flat, Bright, 3/8"X3/4"X16g	2
35	W072606	Washer, Flat, Black, 7/16" X 1+5/8" X 6mm	1
36	WM10S	Washer, Lock, Int Tooth, M 10	4
37	WS103.52.2M	Washer, Lock, Spring, M10x3.5x2.2	4
38	WS071008	Washer, Lock, Spring, 7/16"X5/32"X1/8"	1

EXPLODED VIEW - ENGINE (B&S & Zongshen Single Cyl) & TRANSAXLE COMPONENTS

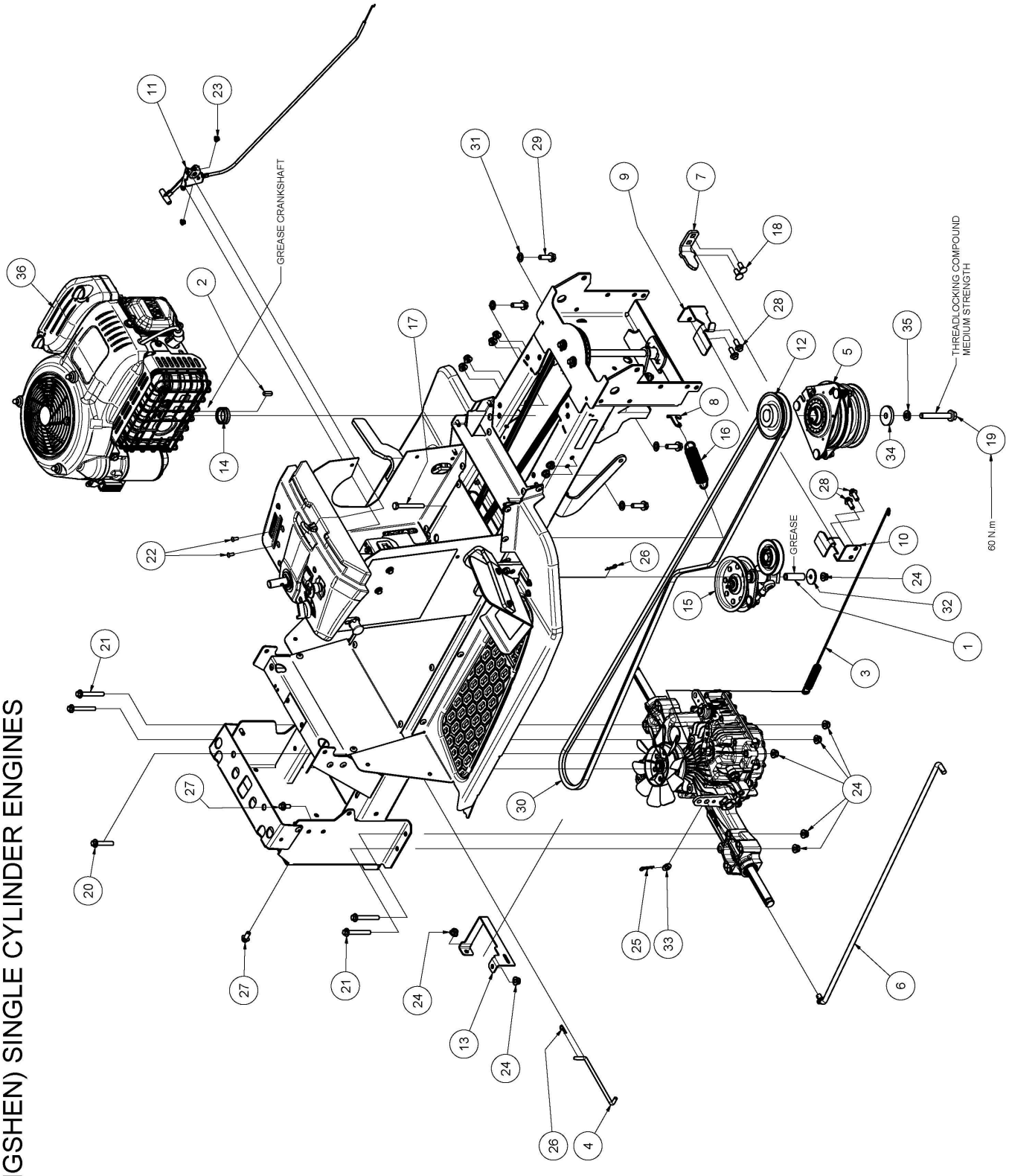

PARTS LIST - ENGINE (B&S & Zongshen Single Cyl) & TRANSAXLE COMPONENTS

ITEM	PART NUMBER	DESCRIPTION	QTY
1	14070	Sleeve, Pivot, Drive Belt Tensioning Arm	1
2	88026	Key, 6.35x 6.35x 20	1
3	A111018	Spring, Extension, Foot Brake	1
4	A169157Z	Link, Disengage, Hydro	1
5	A179016	Clutch/Brake, Elecmagnet	1
6	A179033Z	Link, Drive, Hydro	1
7	A179047Z	Restraint, Clutch/Brake	1
8	A179203Z	Lug, Spring	1
9	A179211Z21C	Guide, Belt/Chain, Front, Left	1
10	A179213Z21C	Guide, Belt/Chain, Front, Right	1
11	A179221	Control, 90', Inc Throttle Cable, L= 510	1
12	A179314	Pulley, Engine	1
13	A210009Z	Guide, Belt, Rear, Extended	1
14	A214132Z	Spacer, Crankshaft, Zongshen, L=12.5	1
	A179316Z	Spacer, Crankshaft, B&S, L=12.5	
15		Sub-Assy, Tension, Belt, Drive	1
16	AM145	Spring, Extension, Weight Compensating	1
17	B0870M	Bolt, Hex, M 8 X 70, Pc8.8	1
18	BCHSNM8X20	Bolt, Cup, Sq Neck, M8 X 20 Pc4.6	2
19	BHFF0748	Bolt, Hex, Flange, Unf, 7/16-20x3	1
20	BHFM8X45	Bolt, Hex, Flange, M 8x 45, Pc8.8	1
21	BHFM8X60	Bolt, Hex, Flange, M 8x 60, Pc8.8	4
22	BHSSM5X12	Screw, Button, Hex Soc, M 5 X 12, Pc10.9	5
23	NHFNM5	Nut, Hex, Flange, Nyloc, M 5, Pc8	5
24	NHFNM8	Nut, Hex, Flange, Nyloc, M 8, Pc8	28
25	RP01	Pin, 'R'	2
26	RP04	Pin, 'R'	3
27	SHFM8X16	Screw, Hex, Flange, M_8x_16, Pc8.8	4
28	SHFM8X20	Screw, Hex, Flange, M 8x 20, Pc8.8	22
29	STF0618	Screw, Hex Wash, Taptite Ii, 3/8"X1-1/8"	4
30	V75	Belt, V	1
31	W06S	Washer, Lock, Int Tooth, 3/8", Zn Pl	4
32	W052003	Washer, Flat	1
33	W061216	Washer, Flat, Bright, 3/8"X3/4"X16g	2
34	W072606	Washer, Flat	1
35	WS071008	Washer, Lock, Spring, 7/16"X5/32"X1/8"	1
36	ENGINE	Cox (Zongshen) 16 Hp Single Cylinder	1
	ENGINE	Cox (Zongshen) 18.5 Hp Single Cylinder	
	ENGINE	B&S Intek / Professional Series Single Cylinder	

EXPLODED VIEW - ENGINE (V-Twin B&S & Zongshen) & TRANSAXLE COMPONENTS

B&S INTEK/PROFESSIONAL SERIES V-TWIN
COX (ZONGSHEN) V-TWIN

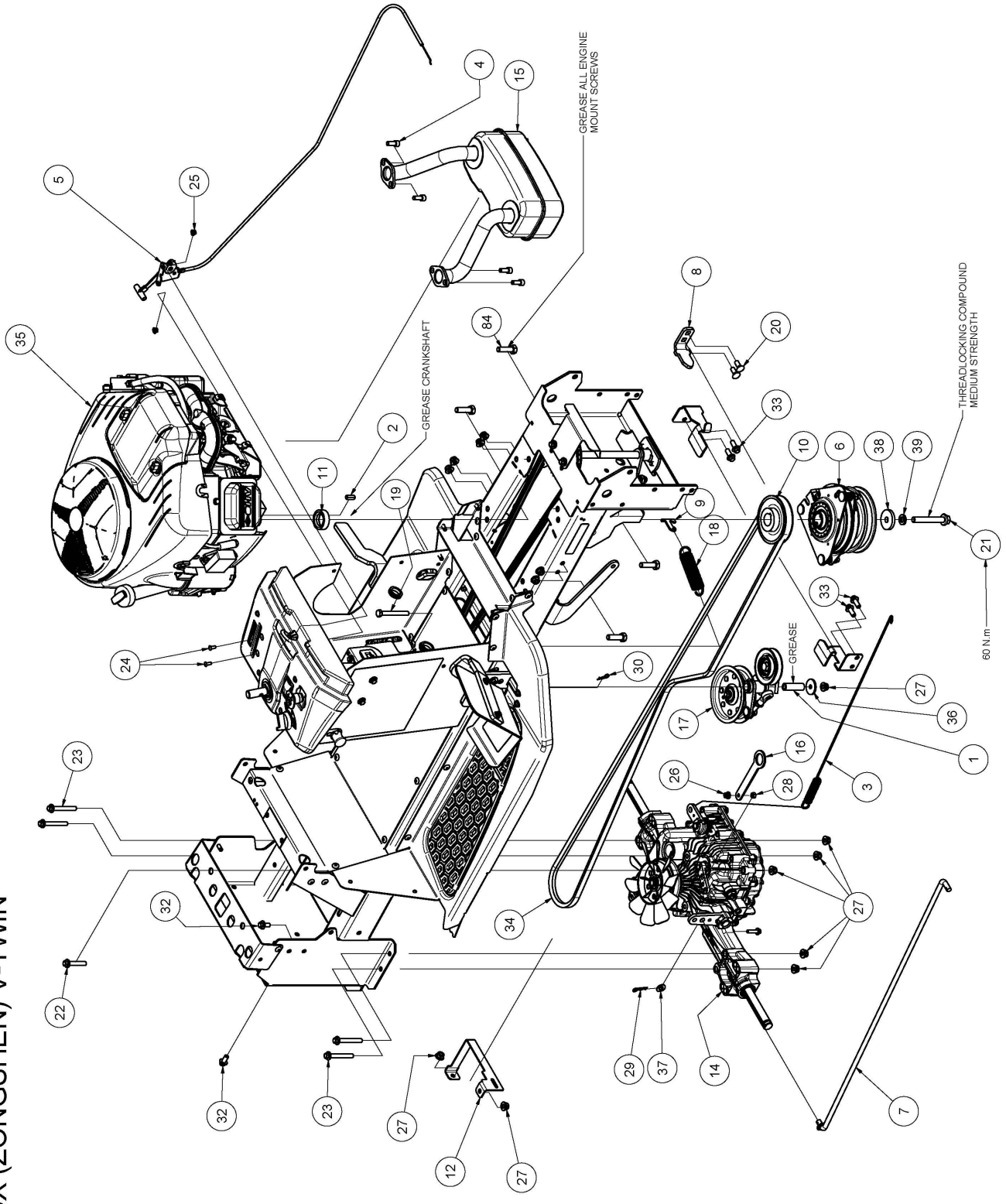

PARTS LIST - ENGINE (V-Twin B&S & Zongshen) & TRANSAXLE COMPONENTS

ITEM	PART NUMBER	DESCRIPTION	QTY
1	14070	Sleeve, Pivot, Drive Belt Tensioning Arm	1
2	88026	Key, 6.35x 6.35x 20	1
3	A111018	Spring, Extension, Foot Brake	1
4	A120733	Screw, Exhaust, B&S, 690341	4
	NHM8 + W08MN	Nut + Washer, Exhaust, Cox (Zongshen) V-Twin	
5	A172275	Control, 90', Inc Throttle Cable, L= 915 B&S	1
	A214133	Control, 90', Inc Cable, L= 895, No Joggle Zongshen	
6	A179016	Clutch/Brake, Elecmagnet	1
7	A179033Z	Link, Drive, Hydro	1
8	A179047Z	Restraint, Clutch/Brake	1
9	A179203Z	Lug, Spring	1
10	A179314	Pulley, Engine, 25.4k6.35, A 85, L=47.5, Cb35x10	1
11	A179316Z	Spacer, Crank Shaft, B&S, L=12.5	1
	A214132Z	Spacer, Crank Shaft, Zongshen, L=12.5	
12	A210009Z	Guide, Belt, Rear, Extended	1
13	A210029Z	Link, Adjust, Height, Cut	1
14		Transaxle, Hydro, TTC, K46EH	1
15	A214008	B&S Intek/Profession Series V-Twin Muffler	1
	A214208	Cox (Zongshen) V-Twin Muffler	
16	A214026Z	Link, Disengage, Hydro	1
17		Sub-Assy, Tension, Belt, Drive	1
18	AM145	Spring, Extension, Weight Compensating	1
19	B0870M	Bolt, Hex, M 8 X 70, Pc8.8	1
20	BCHSNM8X20	Bolt, Cup, Sq Neck, M8 X 20 Pc4.6	2
21	BHFF0748	Bolt, Hex, Flange, Unf, 7/16-20x3	1
22	BHFM8X45	Bolt, Hex, Flange, M 8x 45, Pc8.8	1
23	BHFM8X60	Bolt, Hex, Flange, M 8x 60, Pc8.8	4
24	BHSSM5X12	Screw, Button, Hex Soc, M 5 X 12, Pc10.9	5
25	NHFNM5	Nut, Hex, Flange, Nyloc, M 5, Pc8	5
26	NHFNM6	Nut, Hex, Flange, Nyloc, M 6, Pc8	13
27	NHFNM8	Nut, Hex, Flange, Nyloc, M 8, Pc8	43
28	NHM6	Nut, Hex, M 6, Pc5	3
29	RP01	Pin, 'R', Steel, 1.6x30	2
30	RP04	Pin, 'R', Steel, 1.4x 25	2
31	SH1030M	Screw, Hex, M10x 30, Pc8.8	1
32	SHFM8X16	Screw, Hex, Flange, M8x16, Pc8.8	2
33	SHFM8X20	Screw, Hex, Flange, M 8x 20, Pc8.8	20
34	V75	Belt, V	1
35	ENGINE	B&S Intek/Professional Series V-Twin	1
	ENGINE	Cox (Zongshen) V-Twin	
36	W052003	Washer, Flat	5
37	W061216	Washer, Flat, Bright, 3/8"X3/4"X16g	2
38	W072606	Washer, Flat	1
39	WS071008	Washer, Lock, Spring, 7/16"X5/32"X1/8"	1

WIRING DIAGRAM - A21420F

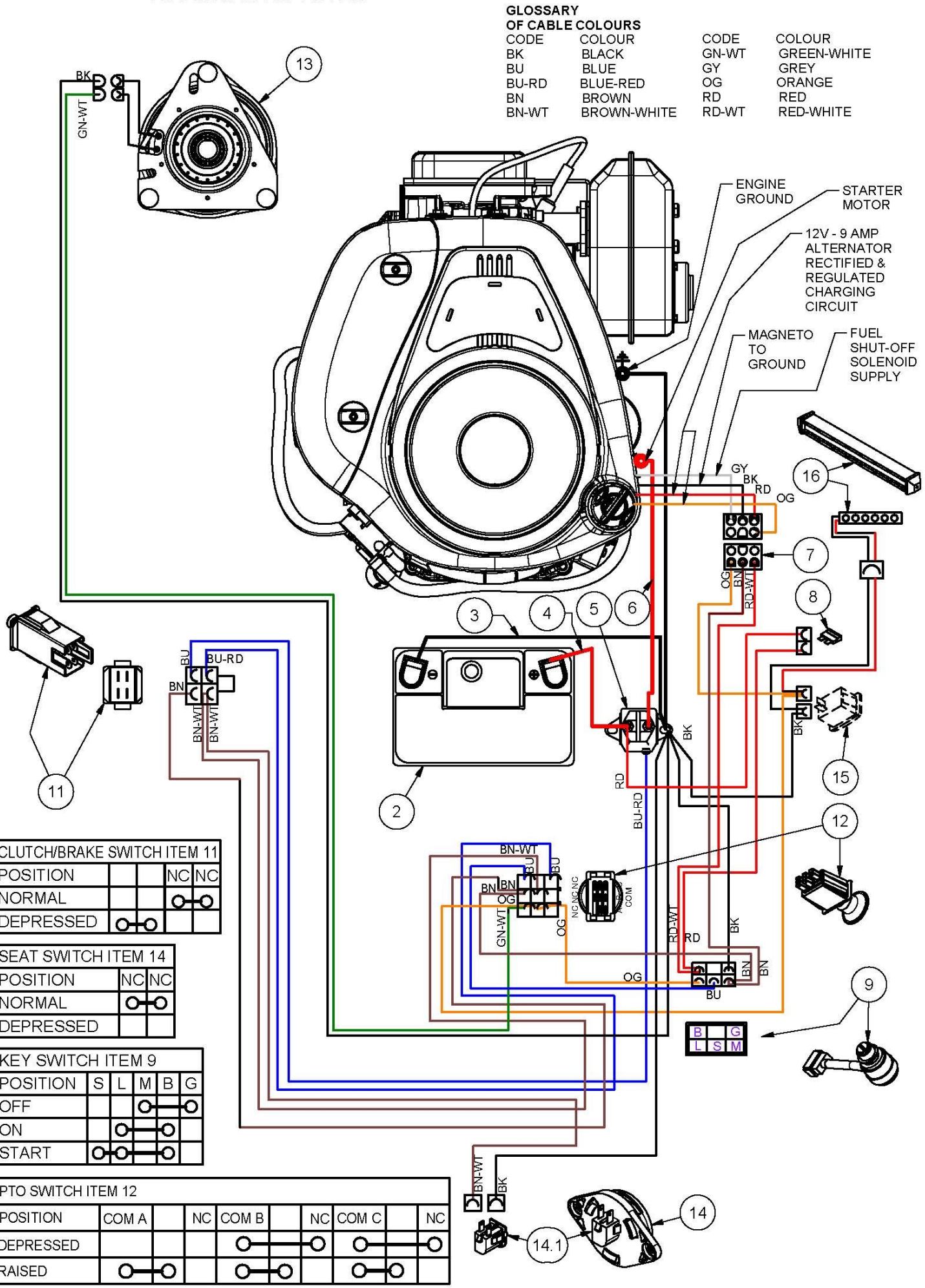

CLUTCH/BRAKE SWITCH ITEM 11				
POSITION			NC	NC
NORMAL			o	o
DEPRESSED	o	o		

SEAT SWITCH ITEM 14		
POSITION	NC	NC
NORMAL	o	o
DEPRESSED		

KEY SWITCH ITEM 9					
POSITION	S	L	M	B	G
OFF			o	o	
ON		o	o	o	
START	o	o	o	o	

PTO SWITCH ITEM 12									
POSITION	COM A		NC	COM B		NC	COM C		NC
DEPRESSED				o	o		o	o	
RAISED	o	o		o	o		o	o	

PARTS LIST - WIRING

ITEM	PART NUMBER	DESCRIPTION	QTY
1		Battery, 12V, MFU1, 9PL, 240CCA	1
2	15235	Lead, Battery, Black, 3term, 8-570-6-330-6	1
3	89082	Lead, Battery, Red, L=200	1
4	AM159	Solenoid	1
5	AM265	Lead, Battery, Red, L=490	1
6	A179072	Harness, Wiring, Main	1
7		Fuse, Blade, 20 Amp	1
8	A214087	Switch, Key, 3 Posn, Magneto, 5 Term, M22	1
	A210062KEY	Key	
9	SP2PNONCSM	Switch, Plunger	1
10	CSP2PSM	Cover, Switch, Plunger, 2 Pole, Snap Mtg	1
11	A168117	Switch, PTO	1
12	A179016	Clutch/Brake, Elecmag	1
13	AM16512F	Switch, Seat	1
14	SP1PNCSM	Switch, Plunger	1
15	A163081	Optional, Meter, Hour	1
16	A214017	Headlight (if fitted)	1

EXPLODED VIEW - LINKAGES & STEERING COMPONENTS

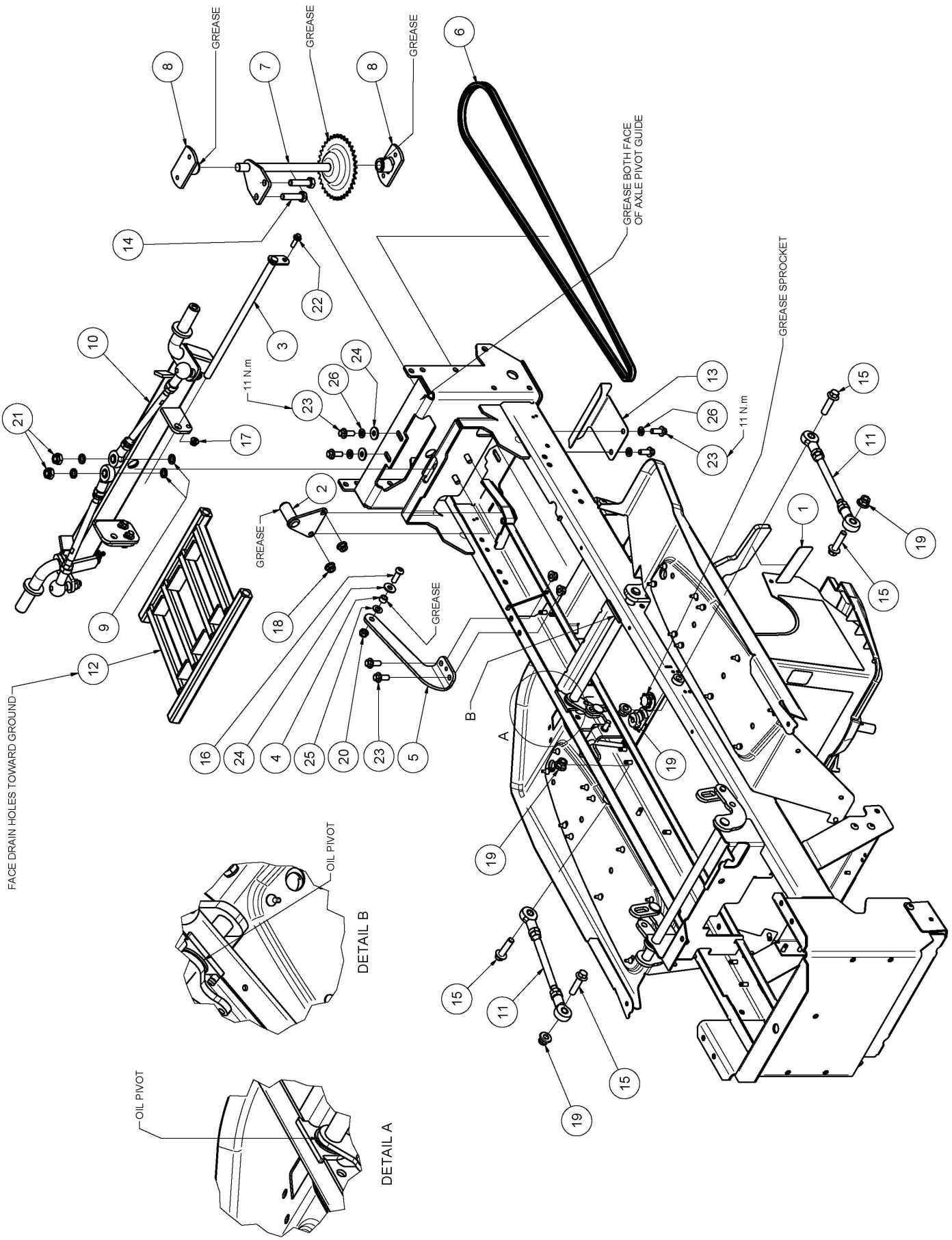

PARTS LIST - LINKAGES & STEERING COMPONENTS

ITEM	PART NUMBER	DESCRIPTION	QTY
1	95067	Non-Skip, Brake Pedal	1
2	A179035Z	Pin, Pivot, Axle, Front	1
3	A210003Z	Pin, Dia=12.0, L=285	1
4	A210006Z	Sleeve, 8.3x12x8	1
5	A210008T	Bracket, Attach, Frame, Cradle	1
6	A210020	Chain	1
7	A210021Z	Idler, Steering	1
8		Sub-Assy, Mount, Idler, Steering	2
8.1	A210022Z	Bracket, Mount, Idler, Steering, M 8	1
8.2	A120685	Bush, Flanged, Nylon	1
9	A210036Z	Washer, Flat, Black, 10x16x2.5	4
10		Sub-Assy, Front, Axle Beam	1
11		Sub-Assy, Tie rod	2
11.1	A210111Z	Rod, Link, M10, L=175	1
11.2	NHM10	Nut, Hex, M10, Pc8	2
11.3	A210112	End, Rod	2
12	A210190	Sub-Assy, Draglink, Inc Bushes	1
12.2	A210122 or AM230	Bush, Sq	4
12.1	A168406T20M	Link, Drag	1
13	A214022	Heat Shield, Steering Crank	1
14	B1040M	Bolt, Hex, M10x40, Pc8	2
15	BHFM10X1.25X40	Bolt, Hex, Flange, M10x1.25x40, Pc8.8	4
16	BHSSM8X25	Screw, Button, Hex Soc, M 8x 25, Pc10.9	1
17	NHFNM6	Nut, Hex, Flange, Nyloc, M 6, Pc8	13
18	NHFNM8	Nut, Hex, Flange, Nyloc, M 8, Pc8	43
19	NHFNM10X1.25	Nut, Hex, Flange, Nyloc, M10x1.25, Pc8	4
20	NM8NT	Nut, Hex, Nyloc, Thin, M 8, Pc6	1
21	NM10NT	Nut, Hex, Nyloc, Thin, M10, Pc6	4
22	SHFM6X20	Screw, Hex, Flange, M 6x 20, Pc8.8	2
23	SHFM8X20	Screw, Hex, Flange, M 8x 20, Pc8.8	20
24	W05M202	Washer, Flat, M 8x 21.0x 2.0	3
25	W08MN	Washer, Flat, Bright, M 8x 17x1, 2	27
26	WS050216	Washer, Lock, Spring, 5/16"X1/8"X1/16"	4
133	A210029Z	Link, Adjust, Height, Cut	1
134	SH1030M	Screw, Hex, M10x 30, Pc8.8	1

EXPLODED VIEW - FRONT AXLE COMPONENTS

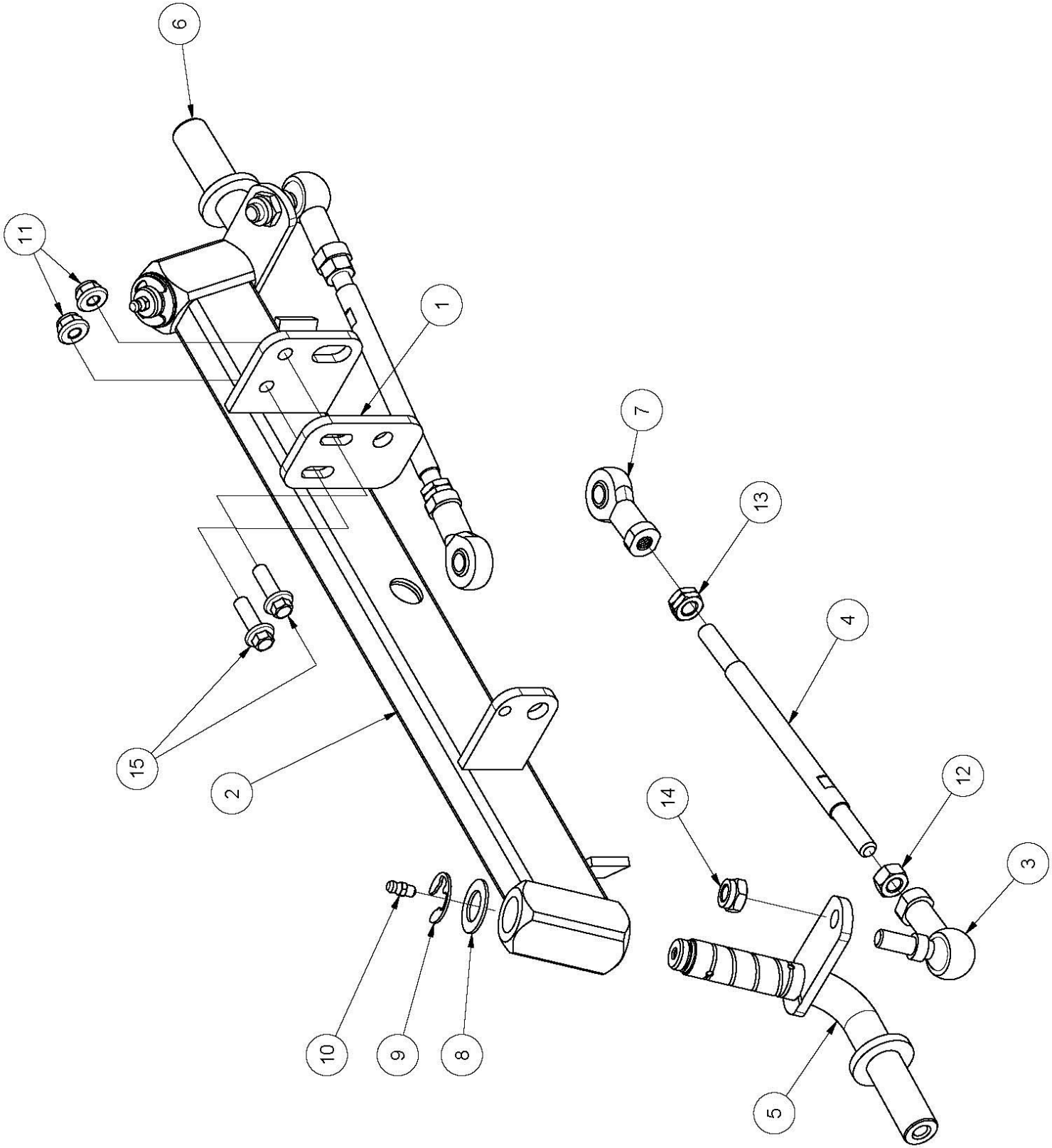

PARTS LIST - FRONT AXLE COMPONENTS

ITEM	PART NUMBER	DESCRIPTION	QTY
1	A210101Z	Adjuster, Cut, Transverse,	1
2	A210102T	Beam, Axle, Front	1
3	A210113	End, Rod, M10, Int, Stl, Stud Ball	2
4	A210114Z	Rod, Link, M10xm10-Lh, L=198	2
5	A210203Z	Axle, Stub, Left, Dia=20, 107.5 Deg, M10	1
6	A210204Z	Axle, Stub, Right, Dia=20, 107.5 Deg, M10	1
7	A210212	End, Rod, M10-Lh, Int, Stl+Brz	2
8	AM336	Washer, Sealing, Shaft	2
9	C02	Circlio, Ext, 'E' Type, 15 Idx1.5	2
10	GNTF6	Nipple, Grease, Straight, M6	2
11	NHFNM8	Nut, Hex, Flange, Nyloc, M 8, Pc8	2
12	NHM10	Nut, Hex, M10, Pc8	2
13	NHM10LH	Nut, Hex, M10-Lh, Pc5	2
14	NM10NT	Nut, Hex, Nyloc, Thin, M10, Pc6	2
15	SHFM8X25	Screw, Hex, Flange, M8x 25, Pc8.8	2

EXPLODED VIEW - MOWING ATTACHMENT 32” (STOCKMAN)

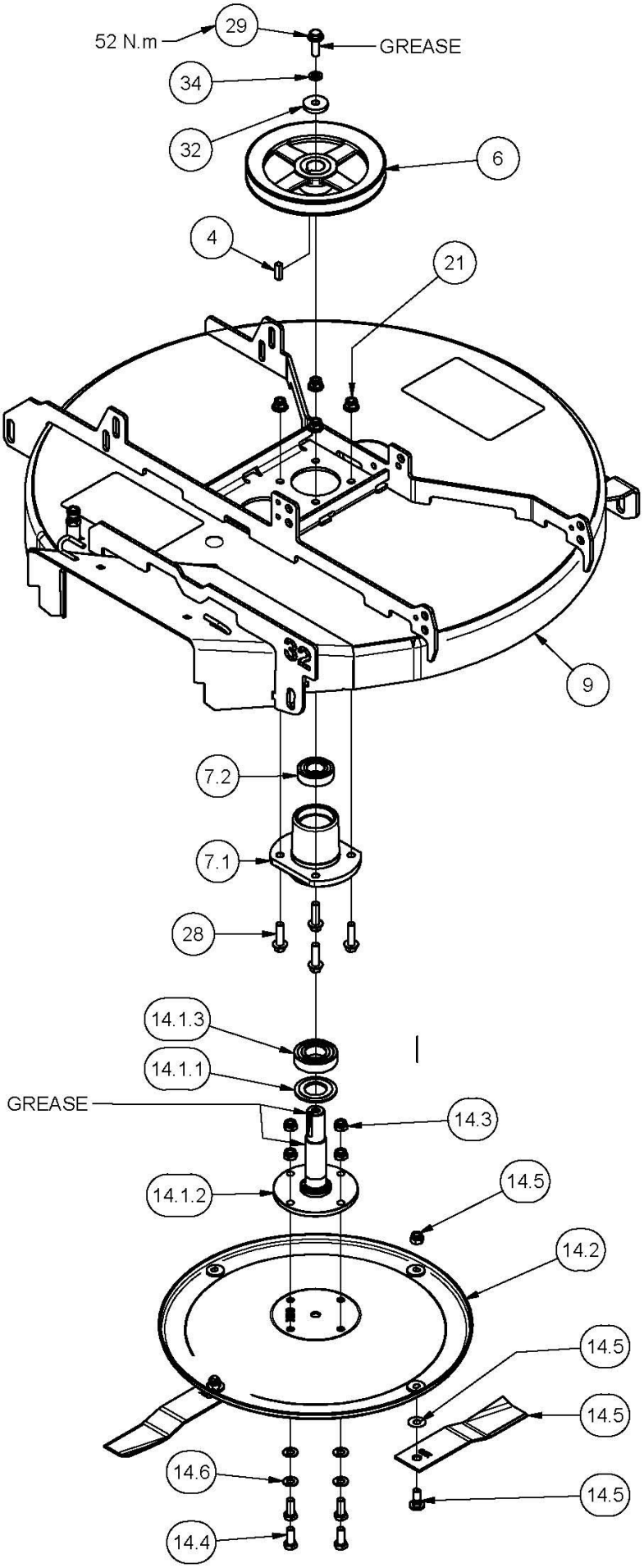

PARTS LIST - MOWING ATTACHMENT 32” (STOCKMAN)

BASE MODEL ONLY, SEE PAGE 60 FOR 32” PLUS DECK

COMPLETE DECK PART NUMBER CA211

MULCHING KIT CA183

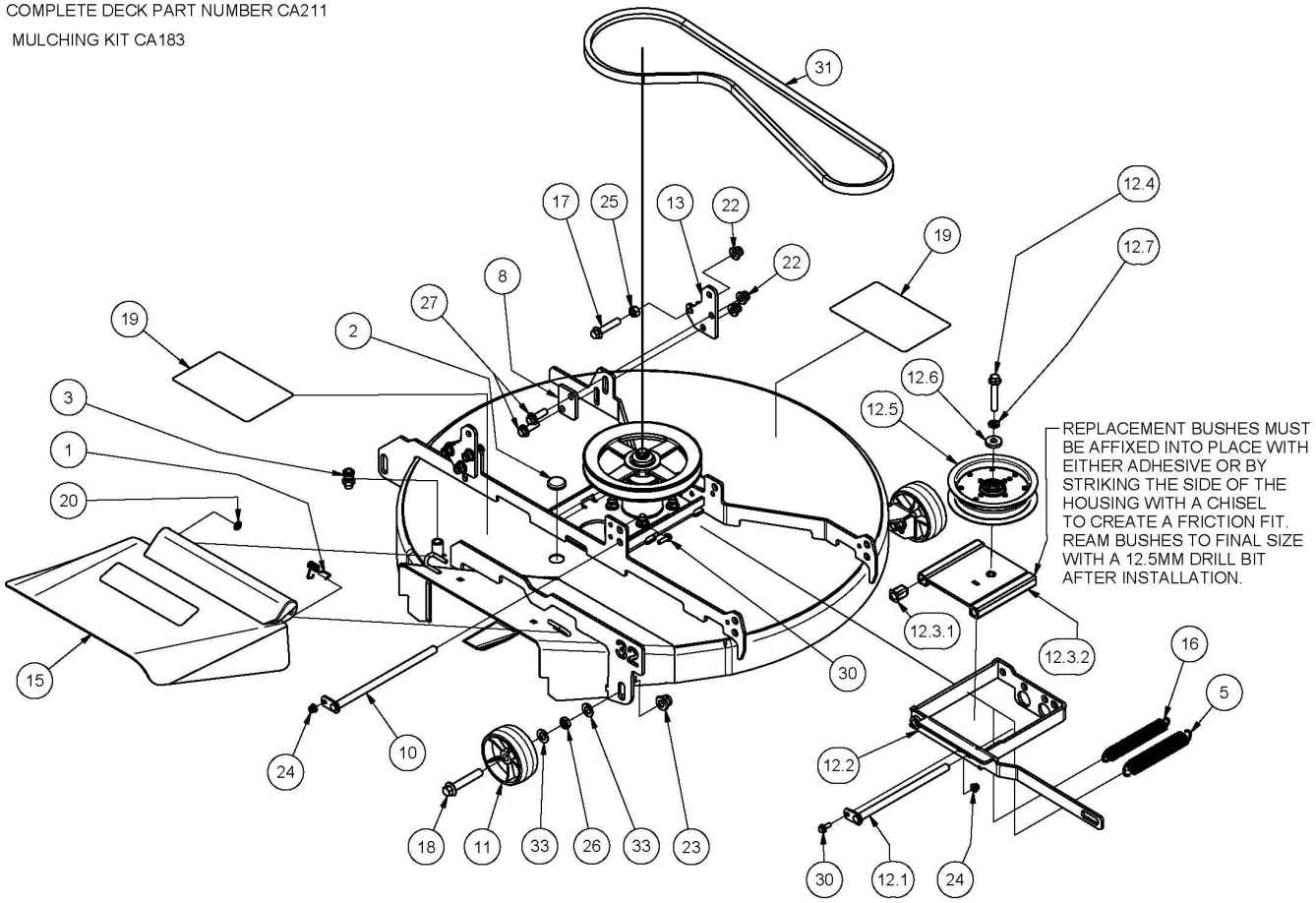

ITEM	PART NUMBER	DESCRIPTION	QTY	ITEM	PART NUMBER	DESCRIPTION	QTY
1	A100003	Spring, Torsion, Deflector	1	14.2	AM07604A	Disk, Cutter	1
2	A121512	Grommet, Blanking, 1"	1	14.3	NM10NT	Nut, Hex, Nyloc, Thin, M10, Pc6	4
3	A121513	Adaptor, Hose, Spray, Brass	1	14.4	SH1025M	Screw, Hex, M10 X 25, Pc 8.8	4
4	A156017	Key, 8x 7x 25	1	14.5	SKIT54N	Pair, Blade+Bolt+Washer+Nut	1
5	A170028	Spring, Extension	1	14.6	W10MN	Washer, Flat, Bright, M10x 21x1.6	4
6	A180007	Pulley, Cutter	1	15	AM259	Deflector	1
7		Sub-Assy, Housing, Bearing, Cutter	1	16	AM264	Spring, Extension, Cutter Belt, Short	1
7.1	A180003B	Housing, Bearing, Flange	1	17	BHFM10X1.25X50	Bolt, Hex, Flange, M10x1.25x 50, Pc8.8	2
7.2	BB255215NN	Bearing, Ball	1	18	BHFM12X1.25X70	Bolt, Hex, Flange, M12x1.25x70, Pc8.8	2
8	A180019Z	Clamp, Mount, Suspension, Rear	2	19	DEC11617E	Decal, Danger, Mowing Attachment	2
9	A211001T	Deck, Mower, Side, 805(32")	1	20	FPR06	Fastener, Push On	1
10	A211002Z	Pin, Dia=12.0, L=240	1	21	NHFNM10	Nut, Hex, Flange, Nyloc, M10, Pc8	4
11	A211004	Wheel, Anti-Scalp	2	22	NHFNM10X1.25	Nut, Hex, Flange, Nyloc, M10x1.25, Pc8	6
12		Sub-Assy, Idler Frame	1	23	NHFNM12X1.25	Nut, Hex, Flange, Nyloc, M12x1.25, Pc8	2
12.1	A211003Z	Pin, Dia=12.0, L=215	1	24	NHFNM6	Nut, Hex, Flange, Nyloc, M 6, Pc8	1
12.2	A211011Z	Frame, Cradle, Idler	1	25	NHM10	Nut, Hex, M10, Pc8	2
12.3	A211015	Sub-Assy, Frame, Dia=12 Bushes	1	26	NHTM12X1.25	Nut, Hex, Thin, M12x1.25, Pc05	2
12.3.1	A210122 or AM230	Bush, Sq	4	27	SHFM10X1.25X30	Screw, Hex, Flange, M10x1.25x 30, Pc8.8	4
12.3.2	A211016Z	Frame, Slide, Idler, M10	1	28	SHFM10X1.25X35	Screw, Hex, Flange, M10x1.25x 35, Pc8.8	4
12.4	BHFM10X1.25X60	Bolt, Hex, Flange, M10x1.25x 60, Pc8.8	1	29	SHFM10X30PC10.9	Screw, Hex, Flange, M10x 30, Pc10.9	1
12.5	PIFBB0620C	Idler, Flat	1	30	SHFM6X20	Screw, Hex, Flange, M 6x 20, Pc8.8	1
12.6	W102705	Washer, Flat	1	31	V76	Belt, V	1
12.7	WS103.52.2M	Washer, Lock, Spring, M10x3.5x2.2	1	32	W103506	Washer, Flat	1
13	A211017Z	Mount, Suspension, Rear, 10	2	33	W12MN	Washer, Flat, Bright, M12x 24x1.6	4
14		Sub-Assy, Cutter	1	34	WSM10X3.66X2.69	Washer, Lock, Spring, M10x3.66x2.69	1
14.1	A192025	Sub-Assy, Spindle, Flanged, 25	1				
14.1.1	A180013Z	Shield, Bearing, 32x60x3.6	1				
14.1.2	A192005	Spindle, Flanged, Cutter, 25, T=7	1				
14.1.3	BB306216NN	Bearing, Ball	1				

EXPLODED VIEW - MOWING ATTACHMENT 32” (STOCKMAN PLUS)

PLUS MODEL ONLY, SEE PAGE 58 FOR 32” BASE MODEL DECK

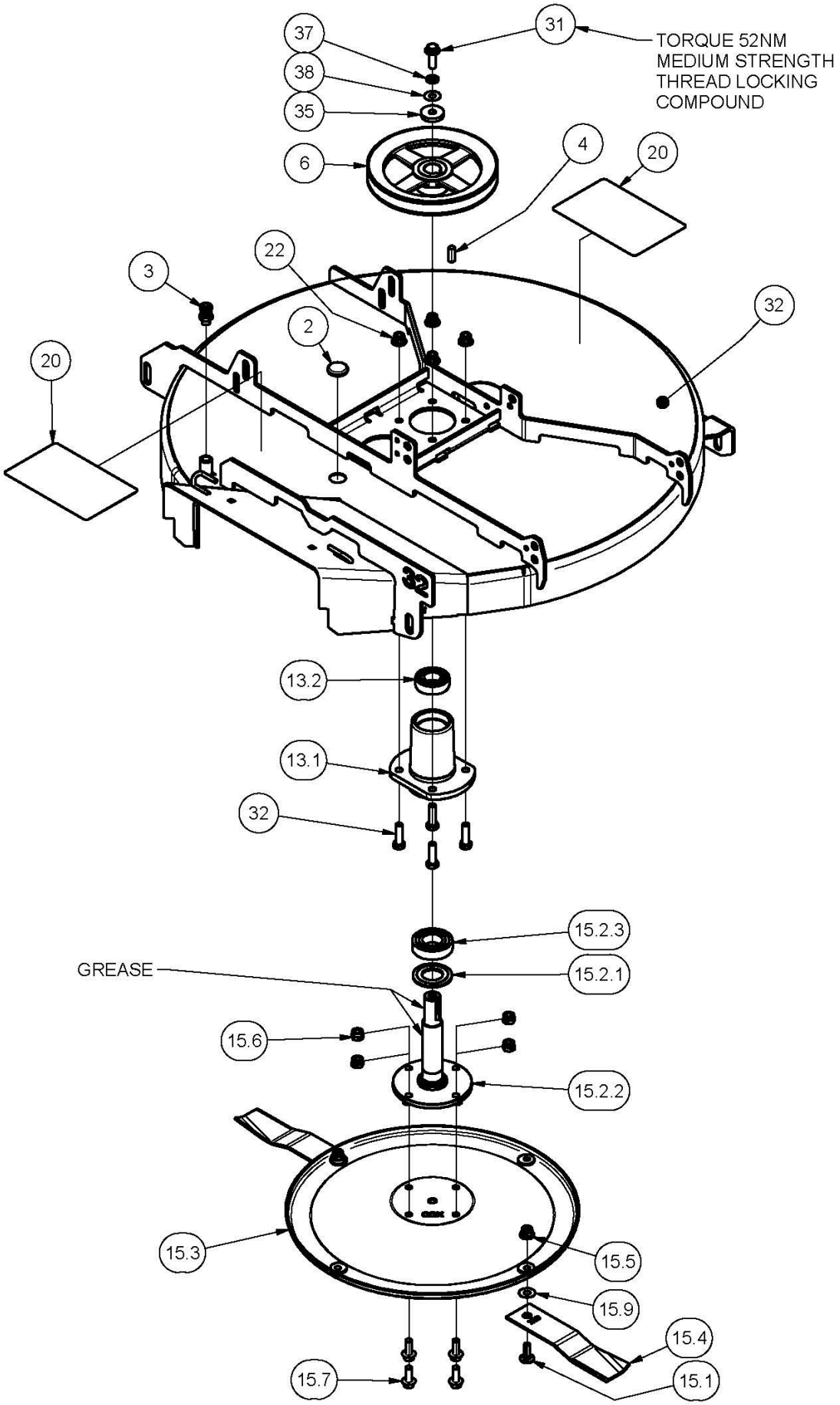

PARTS LIST - MOWING ATTACHMENT 32” (STOCKMAN PLUS)

COMPLETE DECK PART NUMBER CA218
MULCHING KIT CA183

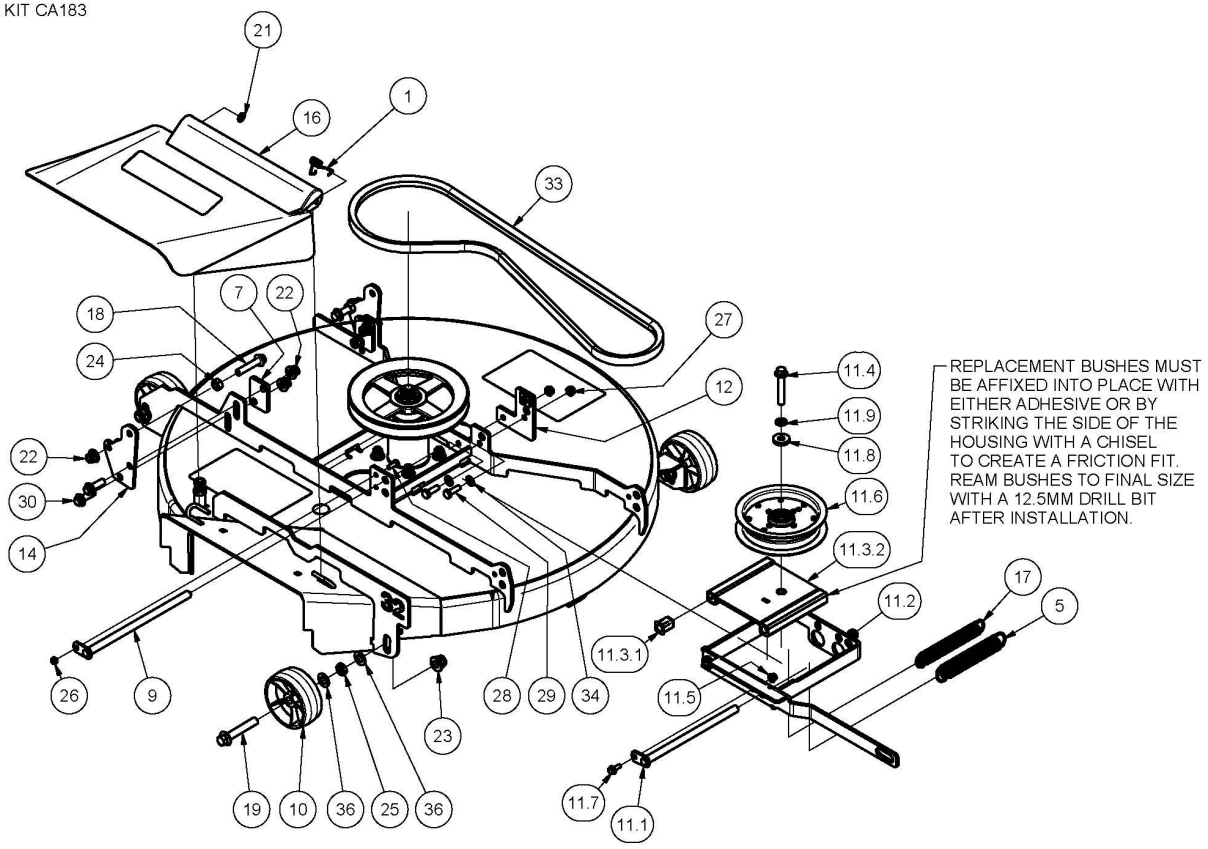

ITEM	PART NUMBER	DESCRIPTION	QTY	ITEM	PART NUMBER	DESCRIPTION	QTY
1	A100003	Spring, Torsion, Deflector	1	15.3	AM07604A	Disk, Cutter	1
2	A121512	Grommet, Blanking, 1"	1	15.4	SKIT54N	Pair, Blade+Bolt+Washer+Nut	2
3	A121513	Adaptor, Hose	1	15.5	NHFNM10	Nut, Hex, Flange, Nyloc, M10, Pc8	2
4	A156017	Key, 8x 7x 25	1	15.6	NHNM10X1.25	Nut, Hex, Nyloc, M10x1.25, Pc8	4
5	A170028	Spring, Extension	1	15.7	SHFM10X1.25X25	Screw, Hex, Flange, M10x1.25x25, Pc8.8	4
6	A180007	Pulley, Cutter	1	15.8	WFM10X18X1.6	Washer, Flat, M10x18x1.6	4
7	A180019Z	Clamp, Mount, Suspension, Rear	2	15.9	WW0616	Washer, Wave	2
8	A211001T	Deck, Mower, Side, 805(32")	1	16	AM259	Deflector	1
9	A211002Z	Pin, Dia=12.0, L=240	1	17	AM264	Spring, Extension	1
10	A211004	Wheel, Anti-Scalp, Dia=100	3	18	BHFM10X1.25X50	Bolt, Hex, Flange, M10x1.25x 50, Pc8.8	2
11		Sub-Assy, Idler Frame	1	19	BHFM12X1.25X70	Bolt, Hex, Flange, M12x1.25x70, Pc8.8	3
11.1	A211003Z	Pin, Dia=12.0, L=215	1	20	DEC11617E	Decal, Danger, Mowing Attachment	2
11.2	A211011Z	Frame, Cradle, Idler	1	21	FPR06	Fastener, Push_On	1
11.3	A211015	Sub-Assy, Frame, Dia=12 Bushes	1	22	NHFNM10X1.25	Nut, Hex, Flange, Nyloc, M10x1.25, Pc8	10
11.3.1	A210122 or AM230	Bush, Sq	4	23	NHFNM12X1.25	Nut, Hex, Flange, Nyloc, M12x1.25, Pc8	3
11.3.2	A211016Z	Frame, Slide, Idler, M10	1	24	NHM10	Nut, Hex, M10, Pc8	2
11.4	BHFM10X1.25X60	Bolt, Hex, Flange, M10x1.25x 60, Pc8.8	1	25	NHTM12X1.25	Nut, Hex, Thin, M12x1.25, Pc05	3
11.5	NHFNM6	Nut, Hex, Flange, Nyloc, M 6, Pc8	1	26	NM6NT	Nut, Hex, Nyloc, Thin, M 6, Pc6	1
11.6	PIFBB0620C	Idler, Flat	1	27	NM8NT	Nut, Hex, Nyloc, Thin, M 8, Pc6	2
11.7	SHFM6X16	Screw, Hex, Flange, M 6x 16, Pc8.8	1	28	SH0616M	Screw, Hex, M 6x 16, Pc4.6	1
11.8	W102705	Washer, Flat, Black, 10.5x27x5	1	29	SH0825M	Screw, Hex, M 8x 25, Pc8.8	2
11.9	WS103.52.2M	Washer, Lock, Spring, M10x3.5x2.2	1	30	SHFM10X1.25X30	Screw, Hex, Flange, M10x1.25x 30, Pc8.8	4
12	A211211Z	Bracket, Mount, Pin, Dia=12	1	31	SHFM10X30PC10.9	Screw, Hex, Flange, M10x 30, Pc10.9	1
13		Sub-Assy, Housing, Bearing	1	32	SHM10X1.25X35	Screw, Hex, M10x1.25x 35, Pc8.8	4
13.1	A211203B	Housing, Bearing	1	33	V76	Belt, V	1
13.2	BB255215NN	Bearing, Ball	1	34	W08MN	Washer, Flat, Bright, M 8x 17x1, 2	2
14	A211217Z	Mount, Suspension, Rear	2	35	W103506	Washer, Flat	1
15	A211220	Sub-Assy, Cutter	1	36	W12MN	Washer, Flat, Bright, M12x 24x1.6	6
15.1	A211005	Bolt, Blade, M10, Pc 10.9	2	37	WSM10X3.66X2.69	Washer, Lock, Spring, M10x3.66x2.69	1
15.2	A211225	Sub-Assy, Spindle	1	38	WW0616	Washer, Wave	1
15.2.1	A180013Z	Shield, Bearing	1				
15.2.2	A211205	Spindle, Flanged, Cutter	1				
15.2.3	BB306216NN	Bearing, Ball	1				

EXPLODED VIEW - MOWING ATTACHMENT 35” (STOCKMAN PLUS & PRO)

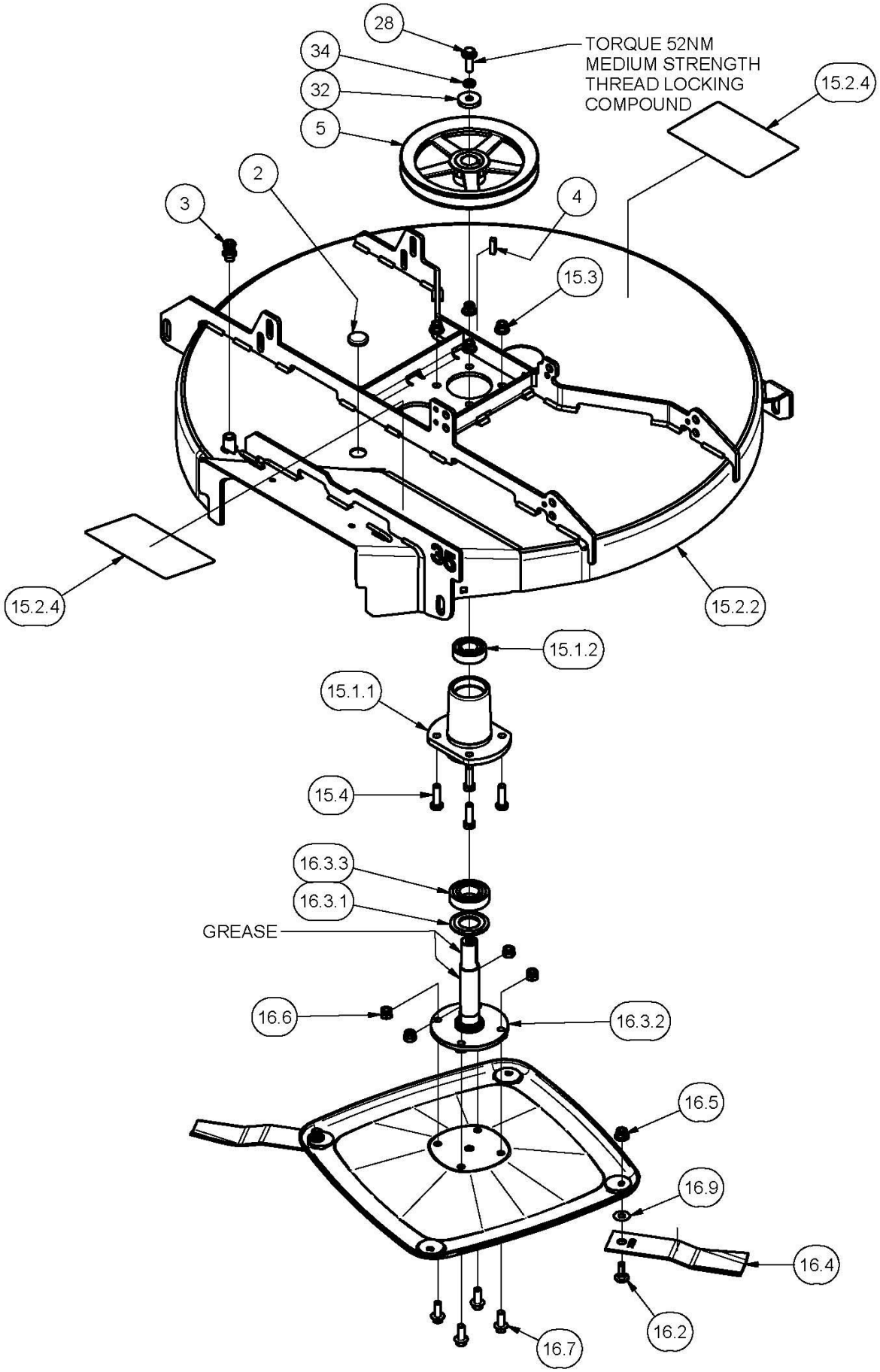

PARTS LIST - MOWING ATTACHMENT 35” (STOCKMAN PLUS & PRO)

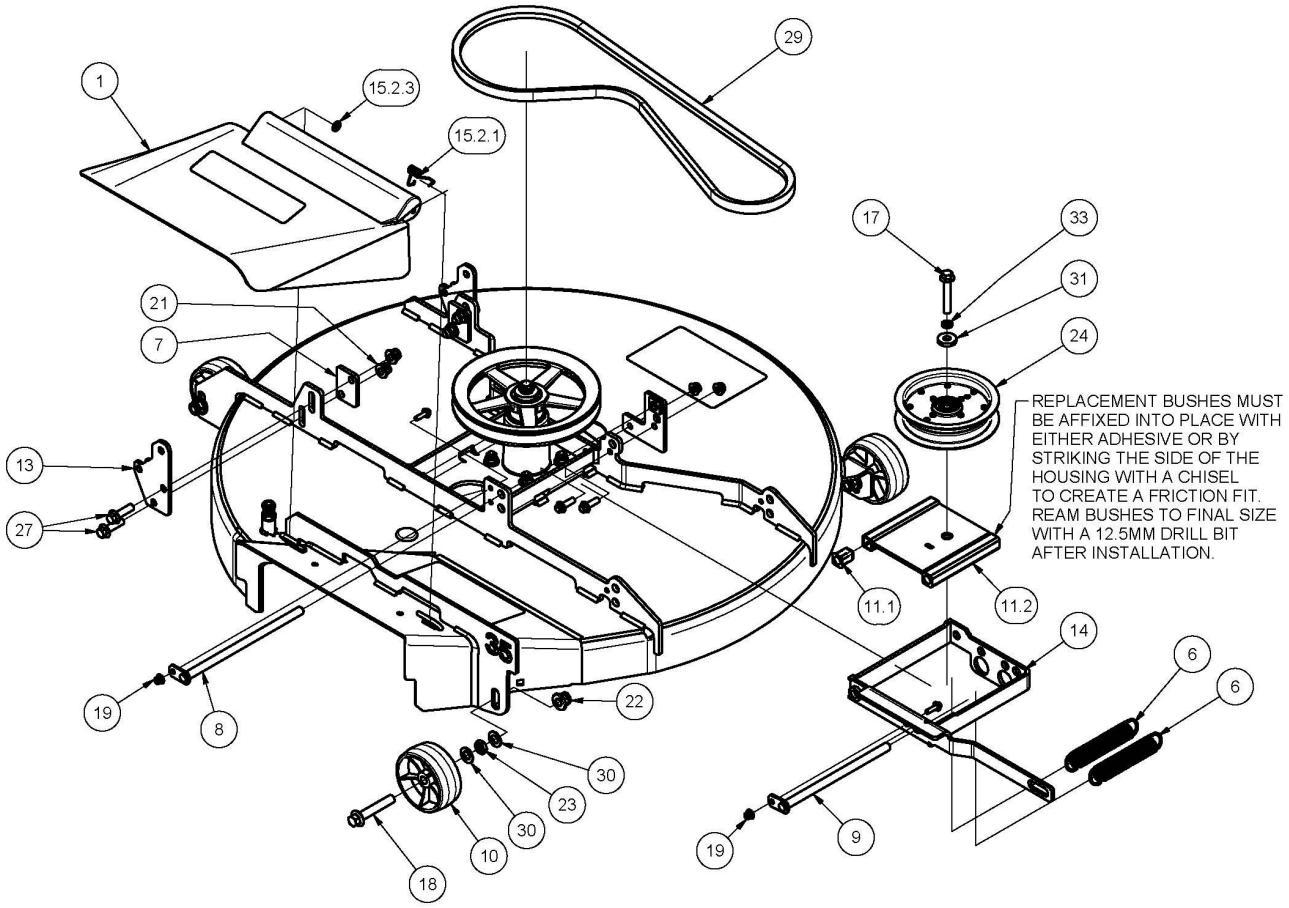

ITEM	PART NUMBER	DESCRIPTION	QTY	ITEM	PART NUMBER	DESCRIPTION	QTY
1	AM259	Deflector	1	16.3.1	A180013Z	Shield, Bearing	1
2	A121512	Grommet, Blanking, 1"	1	16.3.2	A211205	Spindle	1
3	A121513	Adaptor, Hose	1	16.3.3	BB306216NN	Bearing, Ball	1
4	A156017	Key, 8x 7x 25	1	16.4	SKIT54N	Pair, Blade+Bolt+Washer+Nut	2
5	A170007	Pulley, Cutter	1	16.5	NHFNM10	Nut, Hex, Flange, Nyloc, M10, Pc8	2
6	A170028	Spring, Extension	2	16.6	NHNM10X1.25	Nut, Hex, Nyloc, M10x1.25, Pc8	4
7	A180019Z	Clamp, Mount, Suspension, Rear	2	16.7	SHFM10X1.25X25	Screw, Hex, Flange, M10x1.25x25, Pc8.8	4
8	A211002Z	Pin, Dia=12.0, L=240	1	16.8	WFM10X18X1.6	Washer, Flat, M10x18x1.6	4
9	A211003Z	Pin, Dia=12.0, L=215	1	16.9	WW0616	Washer, Wave	2
10	A211004	Wheel, Anti-Scalp, Dia=100	3	17	BHFM10X1.25X60	Bolt, Hex, Flange, M10x1.25x 60, Pc8.8	1
11	A211015	Sub-Assy, Frame, Dia=12 Bushes	1	18	BHFM12X1.25X70	Bolt, Hex, Flange, M12x1.25x 70, Pc8.8	3
11.1	A210122 or AM230	Bush, Sq	4	19	NHFNM6	Nut, Hex, Flange, Nyloc, M 6, Pc8	2
11.2	A211016Z	Frame, Slide, Idler, M10	1	20	NHFNM8	Nut, Hex, Flange, Nyloc, M 8, Pc8	2
12	A211211Z	Bracket, Mount, Pin, Dia=12	1	21	NHFNM10X1.25	Nut, Hex, Flange, Nyloc, M10x1.25, Pc8	4
13	A211217Z	Mount, Suspension, Rear	2	22	NHFNM12X1.25	Nut, Hex, Flange, Nyloc, M12x1.25, Pc8	3
14	A212011Z	Frame, Cradle, Idler	1	23	NHTM12X1.25	Nut, Hex, Thin, M12x1.25, Pc05	3
15.1		Sub-Assy, Housing, Bearing	1	24	PIFBB0620C	Idler, Flat	1
15.1.1	A211203B	Housing, Bearing	1	25	SHFM6X20	Screw, Hex, Flange, M 6x 20, Pc8.8	2
15.1.2	BB255215NN	Bearing, Ball	1	26	SHFM8X25	Screw, Hex, Flange, M8x 25, Pc8.8	2
15.2.1	A100003	Spring, Torsion, Deflector	1	27	SHFM10X1.25X35	Screw, Hex, Flange, M10x1.25x 35, Pc8.8	4
15.2.2	A212001T	Deck, Mower, Side, 890(35")	1	28	SHFM10X30PC10.9	Screw, Hex, Flange, M10x 30, Pc10.9	1
15.2.3	AM274	Fastener, Pushon	1	29	V46	Belt, V	1
15.2.4	DEC11617E	Decal, Danger, Mowing Attachment	2	30	W12MN	Washer, Flat, Bright, M12x 24x1.6	6
15.3	NHFNM10X1.25	Nut, Hex, Flange, Nyloc, M10x1.25, Pc8	4	31	W102705	Washer, Flat	1
15.4	SHM10X1.25X35	Screw, Hex, M10x1.25x 35, Pc8.8	4	32	W103506	Washer, Flat	1
16		Sub-Assy, Cutter	1	33	WSM10X2.6X2.6	Washer, Lock, Spring, M10x2.6x2.6	1
16.1	A170003T	Disc, Cutter	1	34	WSM10X3.8X3	Washer, Lock, Spring, M10x3.8x3	1
16.2	A211005	Bolt, Blade	2				
16.3	A211225	Sub-Assy, Spindle	1				

EXPLODED VIEW - MOWING ATTACHMENT 40” (STOCKMAN PLUS & PRO)

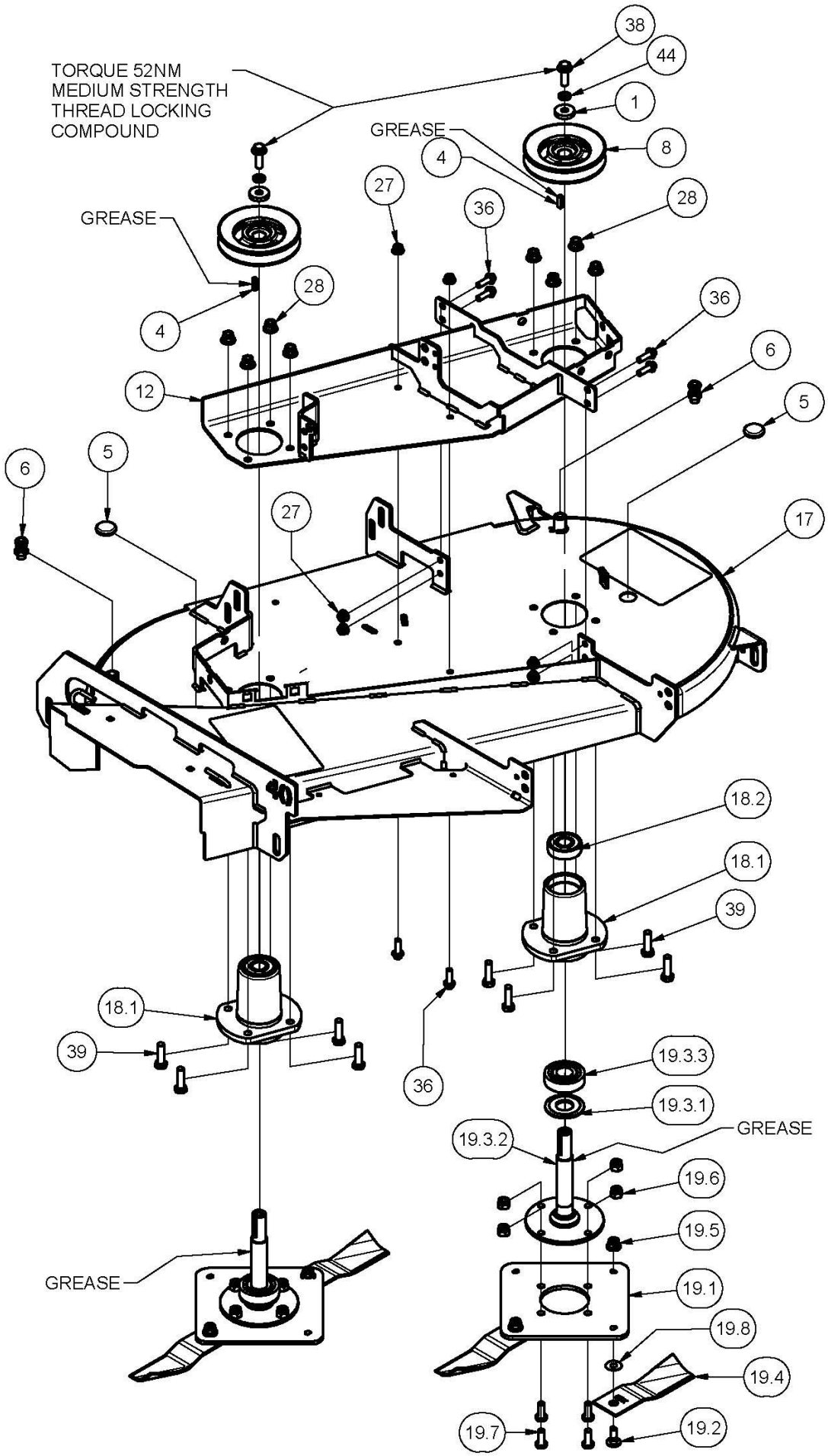

PARTS LIST - MOWING ATTACHMENT 40” (STOCKMAN PLUS & PRO)

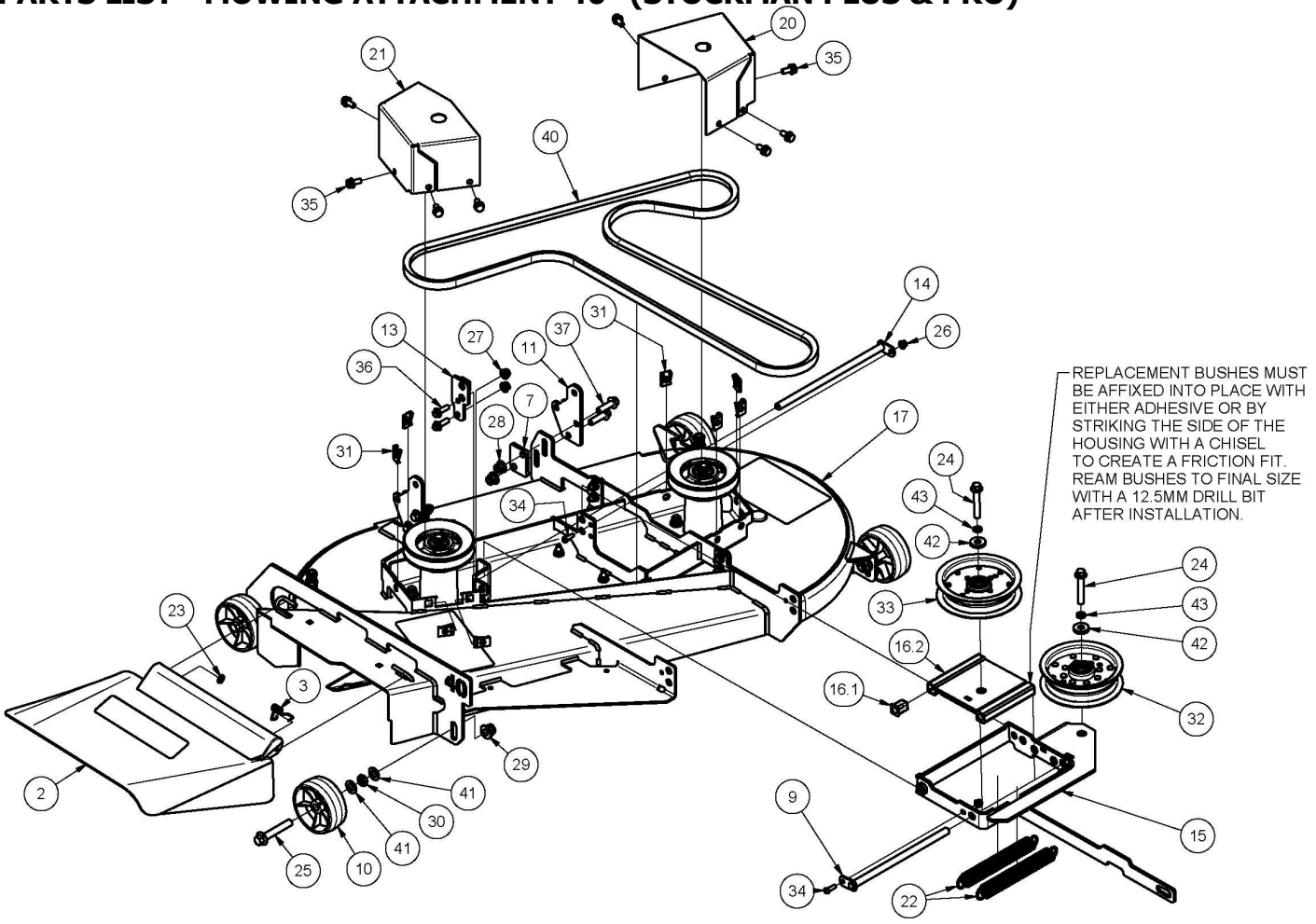

ITEM	PART NUMBER	DESCRIPTION	QTY	ITEM	PART NUMBER	DESCRIPTION	QTY
1	13247	Washer, Flat	2	19.6	NHNM10	Nut, Hex, Nyloc, Style1, M10, Pc8	4
2	AM259	Deflector	1	19.7	SBSHM10X25	Screw, Button, Socket, Hex, M10x 25, Pc10.9	4
3	A100003	Spring, Torsion, Deflector	1	19.8	WW0616	Washer, Wave	2
4	A100025	Key, 6x 6x 20	2	20	A213132T	Cover, Drive, Left	1
5	A121512	Grommet, Blanking, 1"	2	21	A213134T	Cover, Drive, Right	1
6	A121513	Adaptor, Hose	2	22	AM145	Spring, Extension	2
7	A180019Z	Clamp, Mount, Suspension, Rear	2	23	AM274	Fastener, Pushon	1
8	A193007	Pulley, Cutter	2	24	BHFM10X1.25X60	Bolt, Hex, Flange, M10x1.25x 60, Pc8.8	2
9	A211002Z	Pin, Dia=12.0, L=240	1	25	BHFM12X1.25X70	Bolt, Hex, Flange, M12x1.25x 70, Pc8.8	4
10	A211004	Wheel, Anti-Scalp	4	26	NHFNM6	Nut, Hex, Flange, Nyloc, M 6, Pc8	2
11	A211217Z	Mount, Suspension, Rear	2	27	NHFNM8	Nut, Hex, Flange, Nyloc, M 8, Pc8	8
12	A213003T	Frame, Reinforce, Deck	1	28	NHFNM10X1.25	Nut, Hex, Flange, Nyloc, M10x1.25, Pc8	12
13	A213007Z	Bracket, Mount, Pin, Dia=12	1	29	NHFNM12X1.25	Nut, Hex, Flange, Nyloc, M12x1.25, Pc8	4
14	A213009Z	Pin, Dia=12.0, L=265	1	30	NHTM12X1.25	Nut, Hex, Thin, M12x1.25, Pc05	4
15	A213011Z	Frame, Cradle, Idler, M10x1.25	1	31	NU135M8	Nut, U, 13 X 5 X M 8	8
16	A213015	Sub-Assy, Frame	1	32	PIFBB10	Idler, Flat	1
16.1	A210122	Bush, Sq	4	33	PIFBB0620C	Idler, Flat	1
16.2	A213013Z	Frame, Slide, Idler	1	34	SBSHM6X20	Screw, Button, Soc, Hex, M 6x 20, Pc10.9	2
17	A213105	Housing, Cutter, 1005(40")	1	35	SEMSM8X20	Screw, Hex, +Washers, M8x20	8
18		Sub-Assy, Housing, Bearing	2	36	SHFM8X25	Screw, Hex, Flange, M8x 25, Pc8.8	8
18.1	A211203B	Housing, Bearing	1	37	SHFM10X1.25X35	Screw, Hex, Flange, M10x1.25x 35, Pc8.8	4
18.2	BB205215NS	Bearing, Ball	1	38	SHFM10X30PC10.9	Screw, Hex, Flange, M10x 30, Pc10.9	2
19	A213120	Sub-Assy, Cutter	2	39	SHM10X1.25X35	Screw, Hex, M10x1.25x 35, Pc8.8	8
19.1	A152013T	Disc, Cutter	1	40	V83	Belt, V	1
19.2	A211005	Bolt, Blade	2	41	W12MN	Washer, Flat, Bright, M12x 24x1.6	8
19.3	A213125	Sub-Assy, Spindle	1	42	W102705	Washer, Flat	2
19.3.1	A181013Z	Shield, Bearing	1	43	WSM10X2.6X2.6	Washer, Lock, Spring, M10x2.6x2.6	2
19.3.2	A213005	Spindle	1	44	WSM10X3.8X3	Washer, Lock, Spring, M10x3.8x3	2
19.3.3	BB256217N	Bearing, Ball	1				
19.4	SKIT33N	Pair, Blade+Bolt+Washer+Nut	2				
19.5	NHFNM10	Nut, Hex, Flange, Nyloc, M10, Pc8	2				

Stockman Decal

Description	Stockman	Plus	Plus (Auto Lock)	Pro
Deck , Safety Warnings	DEC11617E	DEC11617E	DEC11617E	DEC11617E
Drive Pedal , non-skid	A168223	A168223	A168223	A168223
Park Brake , non-skid	95067	95067	95067	95067
Seat , Genuine Spare Parts decal	DEC594	DEC594	DEC594	DEC594
Seat , Seat Switch Instructions	DEC24617E	DEC24617E	DEC24617E	DEC24617E
Console , Key Switch	DEC341	DEC341	DEC341	DEC341
Console , Throttle Control	DEC314	DEC314	DEC314	DEC314
Console, Fuel level	DEC36317E	DEC36317E	DEC36317E	DEC36317E
Console , Centre (instructions)	DEC585	DEC585	DEC585	DEC585
Console , Right	DEC586	DEC586	DEC586	DEC586
Console , Left	DEC584	DEC584	DEC584	DEC584
Bonnet , Badge (Stockman)	DEC590	n/a	n/a	n/a
Bonnet , Badge (Plus)	n/a	DEC591	DEC591	n/a
Bonnet , Badge (Pro)	n/a	n/a	n/a	DEC592
Bonnet , Front	DEC581	DEC581	DEC581	DEC581
Bonnet , Right	DEC582	DEC582	DEC582	DEC582
Bonnet , Left	DEC583	DEC583	DEC583	DEC583
Bonnet , Feature Decal (Stockman)	DEC602	n/a	n/a	n/a
Bonnet , Feature Decal (Plus)	n/a	DEC603	DEC603	n/a
Bonnet , Feature Decal (Pro)	n/a	n/a	n/a	DEC604
Mudguard , Left	DEC587	DEC587	DEC587	DEC587
Mudguard , Right	DEC589	DEC589	DEC589	DEC589
Mudguard , Height Adjuster	DEC588	DEC588	DEC588	DEC588
Mudguard , Centre	DEC593	DEC593	n/a	n/a
Mudguard , Centre (Diff Lock)	n/a	n/a	DEC601	DEC601

NOTES:

2009
2010
2011
2012
2013
2014
2015
2016
2017
2018
2019
2020
2019
2018
2017
2016
2015
2014
2013
2012
2011
2010
2009

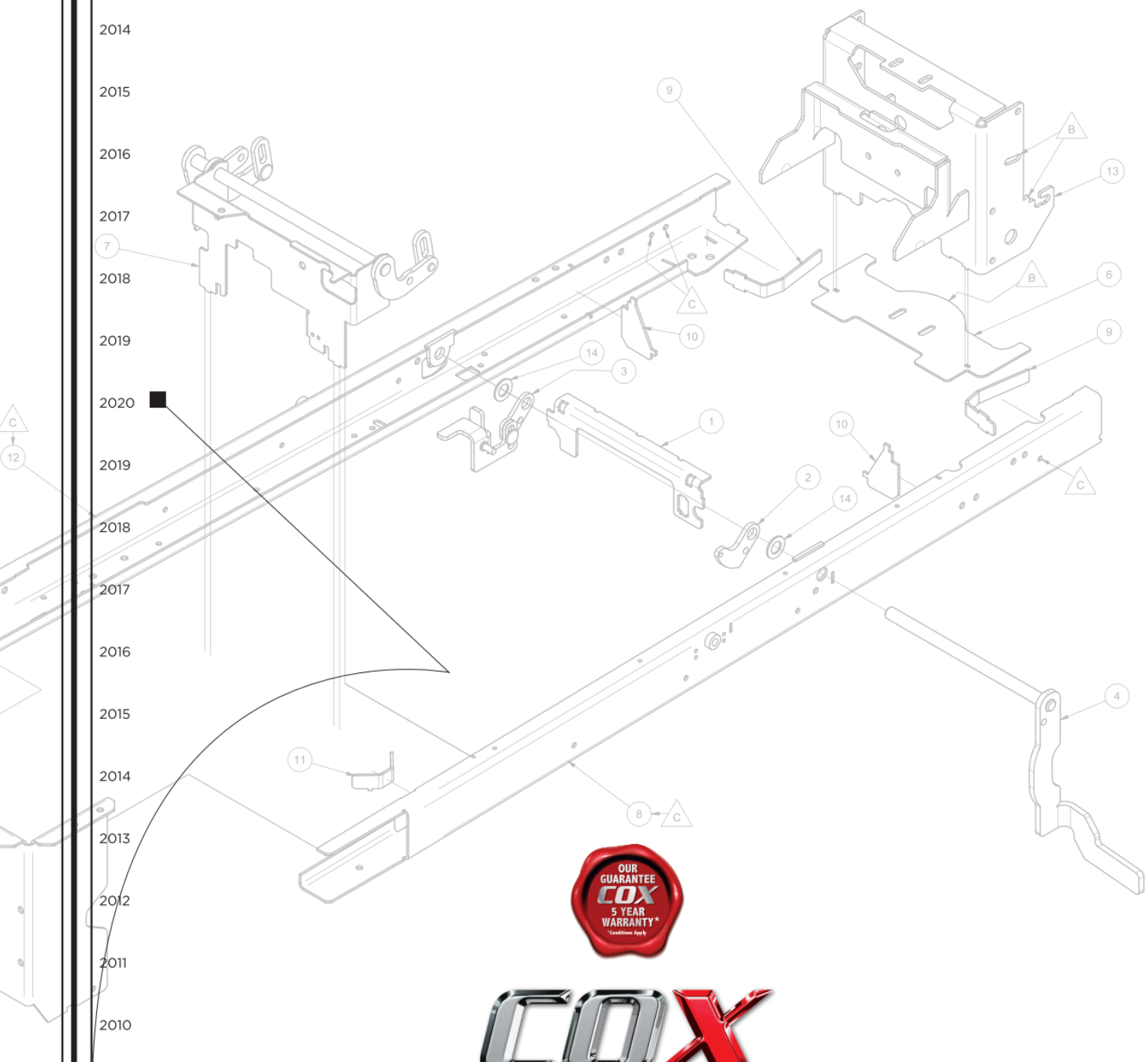

OUR GUARANTEE COX 5 YEAR WARRANTY* *Conditions Apply

COX

Engineered For Life

COX Industries (Australia) Pty Ltd

COXmowers.com.au sales@COXmowers.com.au

Specifications are current at time of publication and subject to continuous improvement without notice.