BWM® Products

BWM Mini Rider

User's Manual

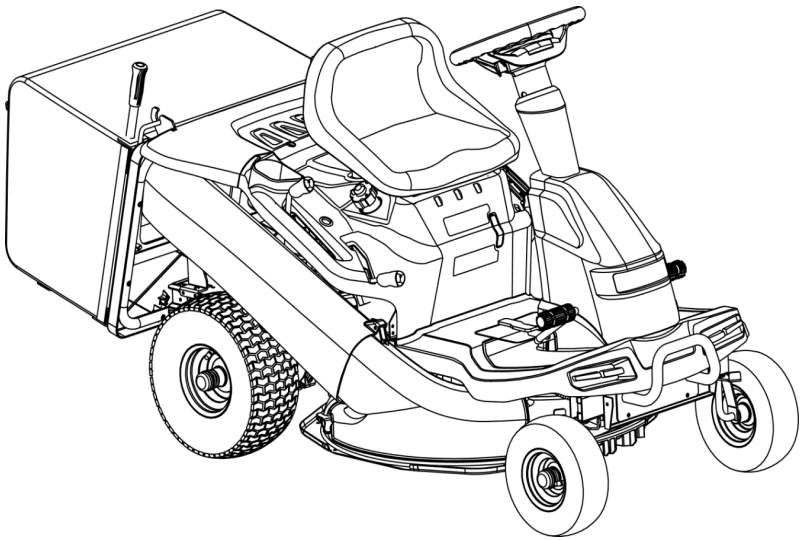

BWM HMR 12/30 CATCHER SERIES

Please read through this owner's manual carefully before using the product, to ensure the safety of yourself and others.

*Due to continuing improvements, actual product may differ slightly from the product described herein.

IMPORTANT

The lawnmower must always be used with utmost caution. Make sure safety precautions and operating instructions are always readily on hand, labels have been affixed to the machine showing pictographs illustrating the main operating precautions

.

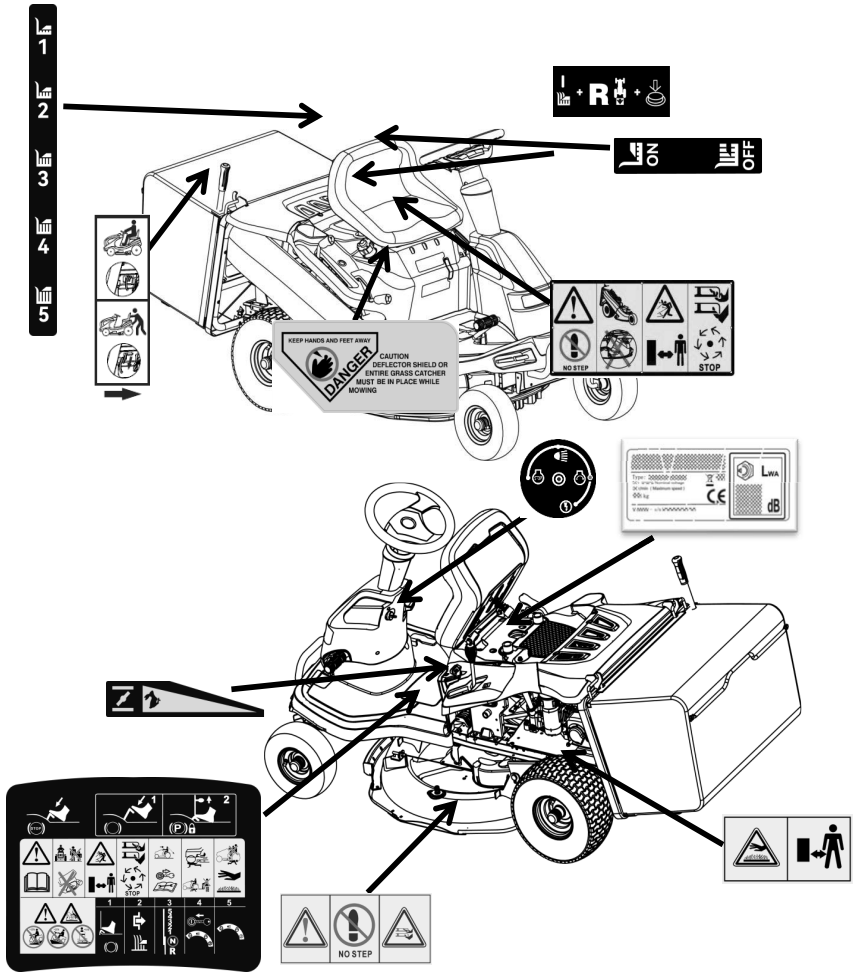

Contents

1. INTRODUCTION.....4
1.1 Symbols and Warnings.....4
2. PRODUCT DESCRIPTION 4
2.1 Designated use 4
2.2 Possible misuses 4
2.3 Safety and protective devices 5
2.4 Symbols on the machine.....5
2.5 Identification of the machine.....6
2.6 Product overview 7
3. FUNDAMENTAL SAFETY PRECAUTIONS......8
3.1 Learn to know the machine 8
3.2 General rules 8
3.3 Preparation 8
3.4 Rule for correct operation 9
3.5 Safety tips 10
3.6 Machine safety 11
3.7 Intended use 11
4. UNPACKING AND ASSEMBLEY......12
4.1 Assembly.....12
4.2 Install battery 16
5. CONTROLS 16
5.1 Controlling the engine speed 17
5.2 Ignition lock 17
5.3 Brake/ Parking pedal.....17
5.4 Driving the mower 18
5.5 Operating the mowing mechanism.....18
5.6 Reverse Mode Operation Button (RMO).....19
6. STARTING UP......19
6.1 Checking the mower mechanism.....19
6.2 Filling with oil.....20
6.3 Filling with fuel 20
6.4 Check tyre pressure 21
6.5 Checking the safety devices 21
7 OPERATING THE RIDE ON MOWER.....23
7.1 Fundamental preparatory measures.....23
7.2 Use of accessories.....23
7.3 Pushing the ride-on mower.....23
7.4 Starting and switching off the engine.....24
7.5 Driving with the ride-on mower.....24
7.6 Mowing with the ride-on mower.....25
8. Cleaning the ride-on mower 27
8.1 Cleaning the deck, engine and transmission.....27
8.2 Cleaning the mowing system.....28
8.3 Dismantling, sharpening and balancing the blade.....28
8.4 Replacing a fuse.....29
9. MAINTENANCE.....29
9.1 Maintenance schedule.....29
9.2 Lubricating plan 30
9.3 Cleaning the air filter.....31
9.4 Checking the spark plug 31
9.5 Adjusting the Bowden cable for the mower mechanism 32
9.6 Starter battery.....32
10. TRANSPORT.....33
11. STORAGE.....34
12. TROUBLESHOOTING.....34
13. TECHNICAL DATA.....36
13.1 Machine dimensions.....38
14. GUARANTEE.....38
14.1 Warranty period 38
14.2 Exclusions 38
15. ILLUSTRATED PARTS LIST.....39

1 INTRODUCTION

- Always safeguard these operating instructions so that they can be consulted if you need any information about the appliance.
- Only pass on the appliance to other persons together with these operating instructions.
- Comply with the safety and warning information in these operating instructions.
- The ride-on mowers are supplied with different types of equipment. Please note that the illustrations may differ somewhat from the original. Please contact a specialist workshop or the manufacturer if you encounter difficulties in following the descriptions.
- Comply with the supplied assembly instructions.

1.1 Symbols and Warnings



It is essential to read through these operating instructions carefully before start-up. This is essential for safe working and trouble-free handling.



Operating instructions



DANGER!
Denotes an imminently dangerous situation which will result in fatal or serious injury if not avoided.



WARNING!
Denotes a potentially dangerous situation which can result in fatal or serious injury if not avoided



CAUTION!
Denotes a potentially dangerous situation which can result in minor or moderate injury if not avoided.



IMPORTANT!
Denotes a situation which can result in material damage if not avoided.



NOTE
Special instructions for ease of understanding and handling.

2 PRODUCT DESCRIPTION

2.1 Designated use

The ride on mower is intended for mowing in domestic gardens. Do not use the machine on slopes with lateral gradients great than 8° (15%). Additional applications, such as for mulching, are only permitted if the original accessories are used and in compliance with the maximum load values. This machine is intended solely for use in non-commercial applications. Any other uses (as well as unauthorized conversions or add-ons) are regarded as contrary to the intended use and will result in exclusion of the warranty as well as loss of conformity; the manufacturer will thus decline any responsibilities for damages and/or injuries suffered by the user or third parties.

2.2 Possible misuse

The ride-on mower is not designed for commercial use in public parks, sports grounds, agriculture and forestry.



WARNING!
Dangers due to overloading the ride-on mower!

Make sure that the permissible inclines/declines are not exceeded. Exceeding these values may exceed the braking capacity of the ride-on mower and lead to dangerous situations!

NOTE

Bear in mind that the ride-on mower does not have approval for road use, and thus is not allowed to be driven on public roads!

2.3 Safety and protective devices

WARNING!

Danger if protective devices are removed or manipulated!

Do not operate with any protective devices removed or manipulated. Defective protective devices must be repaired or renewed immediately!

Above all, the protective devices include:

- Brake contact switch
- Mower mechanism contact switch
- Seat contact switch
- Mowing mechanism covers
- Belt covers

2.4 Symbols on the machine

Symbol	Description
	**READ THE OPERATORS MANUAL(S)** Read, understand, and follow all instructions in the manual(s) before attempting to assemble and operate.
	**RISK OF INJURY.** Blades in movement. The blade will continue to turn for some time after switching off the engine or disabling the blade control.
	**DANGER! DISMEMBERMENT:** Make sure that children stay clear of the machine at all times when engine is running.
	**WARNING -- THROWN SHOCK** This machine may pick up and throw objects which can cause serious personal injury.
	**WARNING!** Non-operators stay away from the equipment; Keep bystanders, helpers, children, and pets at least 20 meters from the machine while it is in operation.
	**WARNING -- ROTATING BLADES** Do not put hands or feet near rotating parts or under the cutting deck. Contact with the blade(s) can amputate hands and feet.
	**DANGER! RISK OF BURNS** Wait for the engine to completely cool down before making any adjustments or servicing the engine itself.
	**DANGER! EJECTED OBJECTS:** Do not operate without the discharge guard or grass-catcher in place.
	**WARNING!** Never use pressure washers to wash the transmission system.

	**WARNING:** When getting on and off, never step on the cutter deck.
	**ATTENTION** Remove the key and read the instructions before carrying out any maintenance or repair work.
	**DANGER -- ROTATING BLADES** To reduce the risk of injury, keep hands and feet away. Do not operate unless discharge cover or grass catcher is in its proper place. If damaged, replace immediately.
	**WARNING!** Do not mow the lawn where others are present.
	**DANGER -- ROTATING BLADES** Never carry passengers. Never carry the children even with the blades off. To avoid a back-over accident, keep children away from the machine while it is in operation.
	**WARNING—MOWER'S STABILITY** The cargo box is not a seat. Do not allow anyone to sit or stand on the cargo box.
	**DANGER -- ROTATING BLADES** Always look down and behind before and while reversing to avoid a back-over accident.
	**Danger!** **Ejected objects:** The ride on mower can only be operated after the lawn discharge pipe is connected.
	**WARNING--SLOPE OPERATION** Do not operate this machine on a slope greater than 15 degrees. Do not trim horizontally on slopes greater than 10 degrees.

2.5 IDENTIFICATION OF THE MACHINE

The label located in the seat bracket has the essential data of each machine, see Figure 1.

1. Name and address of manufacturer.
2. Designation of the machine
3. Type of machine
4. Cutting width
5. Mass of machine
6. Nominal power of engine
7. Serial number
8. Year of manufacture
9. Acoustic power level according to directive 2000/14/CE
10. Conformity mark according to directive 2006/42/EC

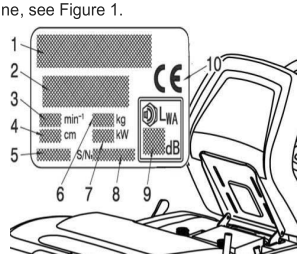

Figure 1

2.6 Product overview (Figure 2)

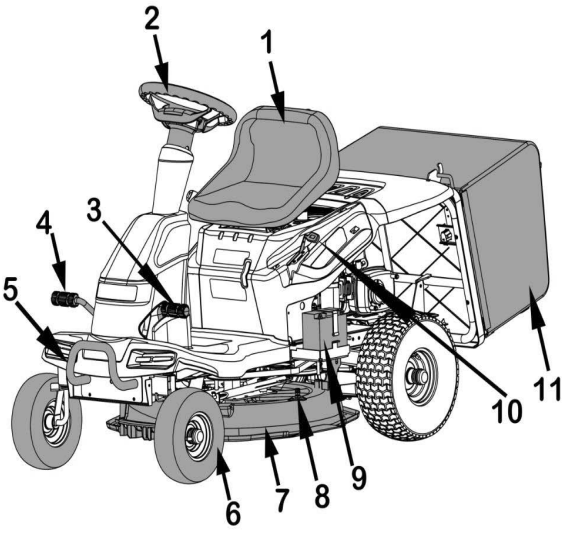

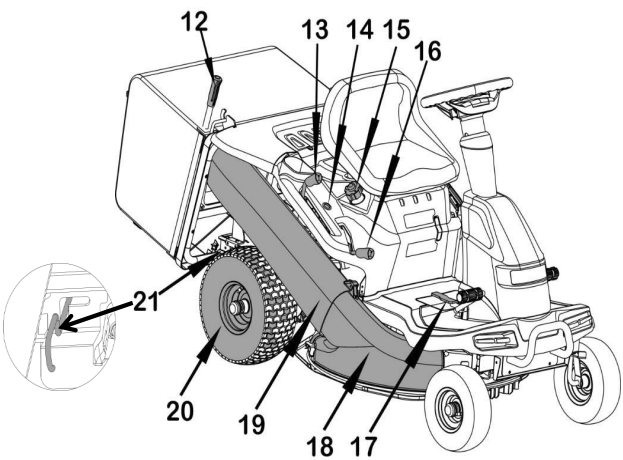

1 Seat
2 Steering wheel
3 Brake pedal
4 Forwards pedal
5 Front bumper
6 Front wheels
7 Mower deck
8 Wash port
9 Battery
10 Engine speed control lever
11 Grass catcher
12 Flip handle
13 Adjusting lever for cutting height
14 Enable button for reverse mowing
15 Fuel cap
16 Mowing engagement controller
17 Reverse pedal
18 Lower catcher pipe
19 Upper catcher pipe
20 Rear wheels
21 Hydrostatic transmission disengagement lever

3. FUNDAMENTAL SAFETY PRECAUTIONS

3.1 LEARN TO KNOW THE MACHINE



HAZARD! Carefully read this instruction manual completely. Abide by all the "SAFETY PRECAUTIONS", before, during and after using the machine.

Keep this manual and all the attachments for any future consultation.

In case of any change in ownership, the manual must be handed over together with the machine.

3.2 GENERAL RULES

3.2.1 IMPORTANT Anyone using the ride on mower should first of all familiarize with the instructions in this manual and completely familiarize with the controls to ensure correct and safe machine use.



3.2.2 Never allow children under the age of 16 and people not fully acquainted with these instructions to use the ride on mower.

3.2.3 Never start and use the ride on mower near other people, especially children or pets.



3.2.4 Keep in mind that the operator or user is liable in the event of accidents or damages occurring to other people or to their property.

3.2.5 HAZARD for people.



- Do not carry passengers.
- Do not carry loads or hook on any type of trailer.
- Such overloads could negatively affect the stability of the machine and overstress the mechanical parts.

- Do not make any changes to the machine.

- Incorrect usage of the machine, will void the warranty and the manufacturer will not be liable for any injuries or damages caused.

3.2.6 IMPORTANT Users of the ride on mower must be in good psycho-physical shape; do not use the machine when tired, feeling bad or under the influence of alcohol, drugs or medicinal products that reduce promptness of reactions.



3.2.7 TRAINING

The driver must be suitably trained and should focus in particular on:

- being careful and concentrated during work;
- the fact that a machine sliding down a gradient cannot be controlled using the brakes.

The main causes of losing control of the machine are:

- lack of wheel grip;
- too much speed;
- inadequate braking;
- machine not suitable for job to be done
- lack of acquaintance with effects deriving from terrain conditions, especially on slopes.

3.3 PREARATION

3.3.1 During work, wear safety boots with non-slip soles, and protective clothes.

3.3.2 Always use a hearing protection headset, protective eyewear or a visor.

3.3.3 Do not use the equipment if you are barefoot or wearing sandals.

3.3.4 Do not use the equipment if you are wearing loose-fitting clothes that may get caught up.

3.3.5 Carefully inspect the area where the you intend to use the lawnmower and remove any objects that could be launched by the machine.

3.3.6 Fire HAZARD.



- Petrol is highly inflammable.

3.3.6.1 Keep the petrol in containers that are specifically designed for the purpose.

3.3.6.2 Only fuel up with petrol outdoors; do not smoke during refueling.

3.3.6.3 Top up with petrol before starting the engine.

Do not remove the tank cap and do not refill petrol while the engine is running or hot.

3.3.6.4 Should the petrol over filled, do not attempt to start the engine, but move the machine well away from the spot where you spilled the petrol; avoid any causes of sparks or fire until the petrol fumes have completely disappeared.

3.3.6.5 Tighten the cap on the petrol tank and the containers safely.

3.3.7 Replace the silencer if it is faulty or damaged.

3.3.8 Before use, always visually check that the blades, the blade fastening screws and the cutters are not worn or damaged. Replace any damaged or worn blades, as well as their fastening screws in complete series to maintain proper balancing. Repairs and maintenance of mechanical parts must be done by a professional after-sales center.

3.4 RULES FOR CORRECT OPERATION

3.4.1 HAZARD! Do not operate the engine in a secluded or restricted area where the dangerous carbon monoxide contained in the exhaust fumes may build up.

3.4.2 Only operate on grounds that are lit by daylight or by adequate artificial lighting.

3.4.3 Before starting the engine, disconnect the blade, place the gearshift in "neutral" (N) and engaged the parking brake.

3.4.5 Do not operate on excessively steep slopes. Check the limits indicated in the manual.

CAUTION - Risk of overturning on steep gradients.

- Do not use the machine on lawns with gradients of more than 25% (14°).
- Do not use the machine on lawns with side gradients above 15% (8°)



Be careful when operating the ride on mower near drop-offs, ditches or embankments.

3.4.6 Remember, there is no such thing as a "safe" gradient. Moving on sloped lawns requires special care and experience.

To prevent overturning:

- never stop or start suddenly on slopes;
- engage the drive gently and always keep a drive gear engaged, especially on downward slopes;
- speed must be reduced on slopes and sharp bends;
- never move down slopes with the gear shift in neutral (N); engage a lower gear;
- be careful of mounds, bumps and hidden hazards;
- never mow across slopes, but always either up or down.

3.4.7 Be very careful when changing direction on slopes. Be careful when mowing in reverse.

3.4.8 Stop the blades when crossing terrain other than lawns and when the mower is transported to and from the work area.

3.4.9 Do not use the ride on mower with faulty guards or without safety devices fitted.

3.4.10 Do not modify the engine adjustments and do not tamper to increase the engine speed. If the speed of the engine is too high, this could cause personal injuries.

3.4.11 Disengage the blade and drive control before starting the engine.

3.4.12 Hands and feet must be kept away from the blade. Always keep away from the grass unloading opening.

3.4.13 Before leaving the driving seat:

- place the gearshift in neutral (N) and engage the parking brake

- disengage the blade and lower the blade deck;

- stop the engine and remove the key.



3.4.14 HAZARD - Before carrying out any inspection, cleaning and servicing operations on the machine, stop the engine, take out the ignition key and follow the instructions in the manual.



HAZARD - The blades are sharp; risk of serious injury. Before carrying out any inspection, cleaning and repair operations on the cutting parts, stop the engine and take out the ignition key. Now disconnect the spark plug wire, and keep the cap away from the plug, to prevent accidental starting.



HAZARD - The blades are sharp; risk of serious injury. Wait for the blades and all the moving parts to come to a complete halt before touching them.

The blade will continue to turn for some time after switching off the engine or disabling the blade control.

3.4.15 Disengage the blade during transport and every time it is not used.

3.4.16 Stop the engine and remove the key and disengage the blade:

- before leaving the machine;

- before filling up with petrol;

- before removing the grass bag;

- before adjusting cutting height if the operation is not performed from the driving seat.

3.4.17 Make sure the accelerator is at minimum before switching off the engine.

3.4.18 Stop the engine, remove the key and disconnect the spark plug wire;

- if you knock against a foreign body, stop the engine, disconnect the spark plug wire and carefully inspect the lawnmower for any damage. Have any damages repaired before you start the engine again; use the services of an authorised after-sales centre.

- should the machine display unusual vibrations, stop the engine and immediately seek the cause of the vibrations. As a rule, unusual vibrations are an indication of a problem.

3.5 SAFETY TIPS

3.5.1 Make sure all the nuts and screws are tight, so the ride on mower is in good operating condition and safe to use.

3.5.2 Wait for the engine to completely cool down before cleaning, adjusting or repairing.

3.5.3 Never store the ride on mower in a secluded area with petrol in the tank, as the fumes may reach a naked flame or a source of sparks.

3.5.4 Wait for the engine to cool down, before storing the machine in a safe, undercover area.

3.5.5 In order to reduce the risk of fire, keep the engine, the silencer, battery housing and petrol storage area free of grass, leaves or excessive grease.

3.5.6 For safety reasons, replace any worn or damaged parts. Only use original spare parts. Non-original spare parts may not suite properly and cause damages and dangers.

3.5.7 Should you need to empty the tank, do so in an open area.

3.5.8 When the machine has to be put away or left unguarded, lower the blade deck and remove the ignition key to prevent unauthorized persons starting the machine.

3.5.9 Regularly check, or have a technician to check, the tightening of the blade and of the engine supporting bolts.

3.5.10 Blade sharpening and balancing adjustment, including removal and refitting, are demanding operations which require specific competence, as well as special equipment; especially for safety reasons, these operations must be carried out by a professional technician. The same applies to blade replacement with a new one.

3.5.11 The ride on mower blade is sharp and can cut the skin. You need to take the necessary precautions whenever you work near or on the blade.



Wear gloves.

3.5.12 Prolonged exposure to vibration and noise can cause injuries to the operator. Wear the personal protective equipment such as earmuffs when using the machine. The duration of operation must be limited.

Do not use the machine when there is lightning.

3.5.13 Never use the machine with damaged guards, or without the safety protective devices (all starting interlocks and operator presence controls) in place.

The safety system shall not be tampered with or disabled.

3.6 MACHINE SAFETY

Your ride on mower has been designed in accordance with specific safety standards, which operate as follows:

A) prevent engine start unless all machine safety conditions are in place.

Conditions to be complied with



1) start switch in position.

2) parking brake engaged.

3) cutting blade disengaged.

4) the driving pedal position is at "N".

B) in case of lack of even one safety condition, stop the engine;

The engine stops if:

1) **the operator leaves the driving seat with blade rotation enabled.**
2) **reverse gear is engaged without having disengaged blade rotation.**

HAZARD Never tamper with the safety switches and their power leads. In case of a fault, do not use the machine, but contact a qualified after-sales center

3.7 INTENDED USE

This machine is designed to be used in the open air only as a ride on mower for lawns and grassed area in gardens and in compliance with the safety and operating instructions indicated in this manual. Any other uses should be deemed "hazardous" and shall void the warranty and relieve the manufacturer of all liability.



HAZARD This machine is not allowed to circulate on public roads and is not homologated to transport persons.

4 UNPACKING AND ASSEMBLING THE RIDE ON MOWER

Comply with the supplied assembly instructions for unpacking and assembling the ride-on mower.

4.1 Assembly

The ride on mower you received（Figure 3）is incomplete and parts in Figure 4 needs to be installed on the machine to be a complete ride on mower

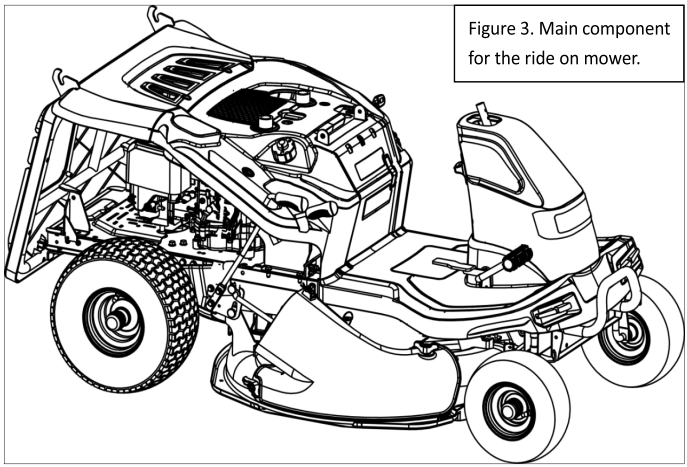

Figure 3. Main component for the ride on mower.

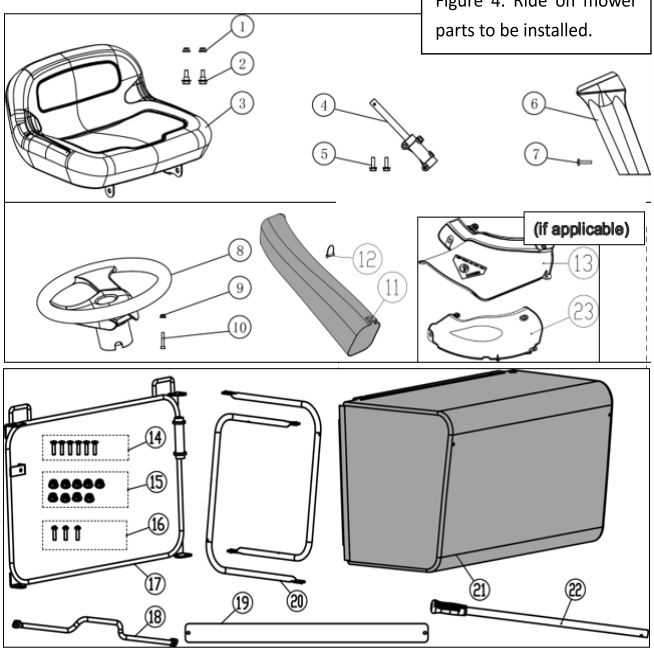

Figure 4. Ride on mower parts to be installed.

1 Nut M8(2x)
2 Seat bolt
3 Seat
4 Direction rod assembly
5 Bolt M8X20 (2x)
6 The shroud of direction rod
7 Bolt M6X30
8 Steering wheel
9 Flange nut M6
10 Bolt M6X35
11 On the draining pipe
12 D-shaped pin 6x50
13 Side deflector (if applicable)
14 Square neck bolt M6x30(6x)
15 Nut M6(9x)
16 Bolt M6x25(3x)
17 Straw bag front frame
18 Straw bag handle
19 Straw bag baseplate
20 Straw bag side pipe(2x)
21 Straw bag
22 Flip handle
23 Mulching kit (if applicable)

4.1.1 Install operator's seat

1. Install the operator's seat to the designated position of the ride on mower according to the method shown in Figure (Figure 5), and the installation status is shown in Figure 6. The numbers in the figures correspond to the part numbers listed in Figure 4.

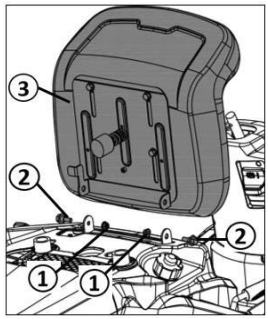

Figure 5

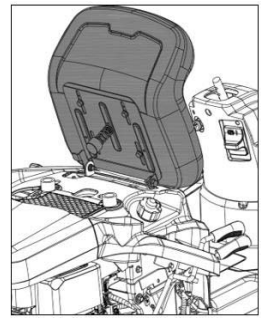

Figure 6

4.1.2 Steering wheel assembly

1. Install the direction rod assembly to the designated position of the ride on mower according to the method shown in Figure 7, and the installation status is shown in Figure 8.

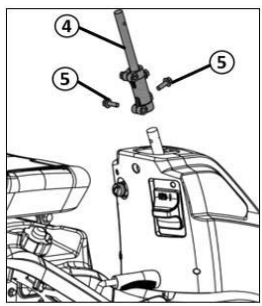

Figure 7

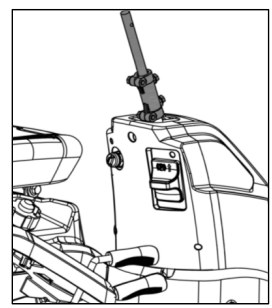

Figure 8

2. Install the shroud of direction rod to the designated position of the ride on mower according to the method shown in Figure 9, and the installation status is shown in Figure 10.

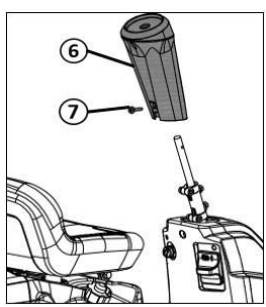

Figure 9

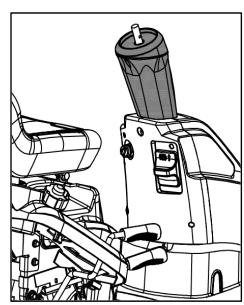

Figure 10

3. Install the steering wheel assembly to the designated position of the ride on mower according to the method shown in Figure 11, and the installation status is shown in Figure 12.

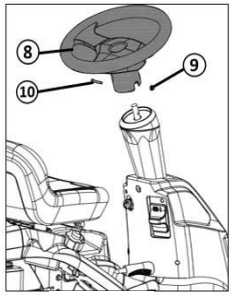

Figure 11

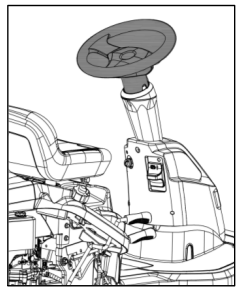

Figure 12

4.1.3 Installation of draining pipe

1. Install the grass discharge pipe to the designated position of the ride on mower according to the method shown in Figure 13.

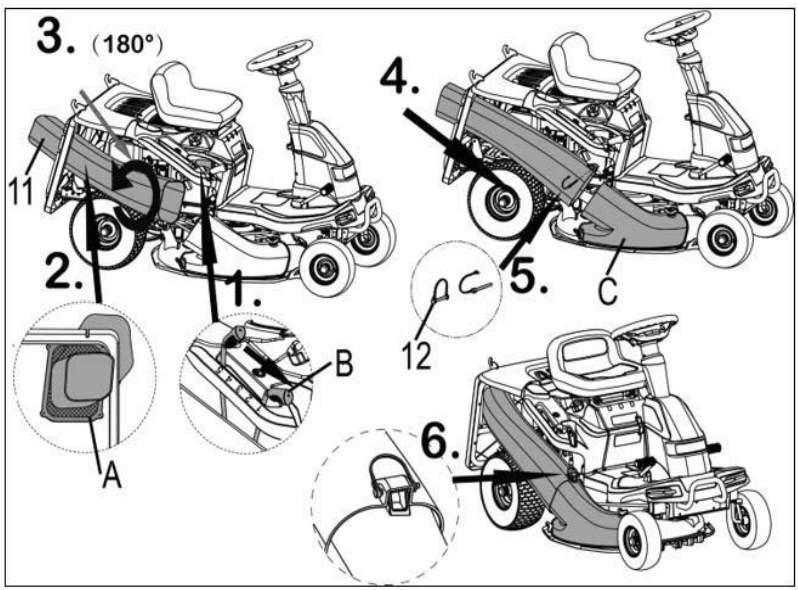

Figure 13

4.1.4 Install side deflector or mulching kit

1. Remove parts no. 18 and 19 as shown in Figure 14 (Note: Part no. 11 is always on the mower and should not be removed).

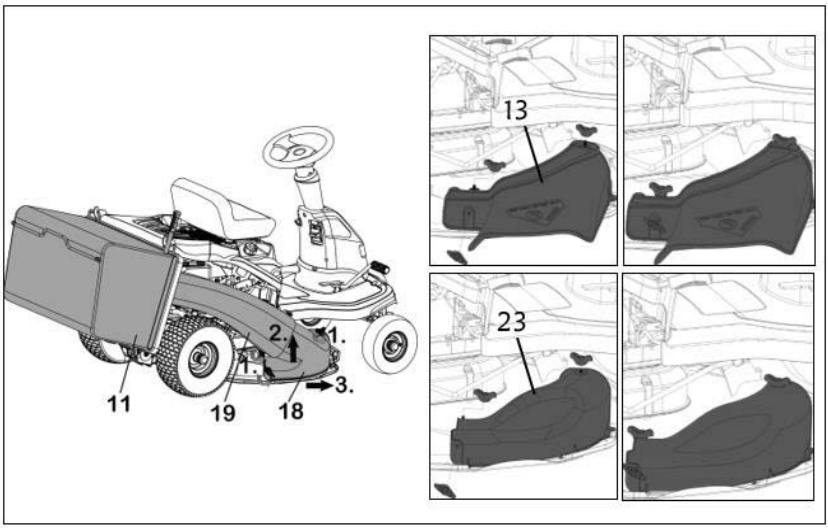

Figure 14

2. Install parts no. 13 the side deflector or no. 23 the mulching kit as shown in Figure 14.

4.1.5 Installation of grass bag.

Assemble the grass bag assembly according to the method shown in Figure 15 and hang it in the designated position of the ride on mower as shown in Figure 16.

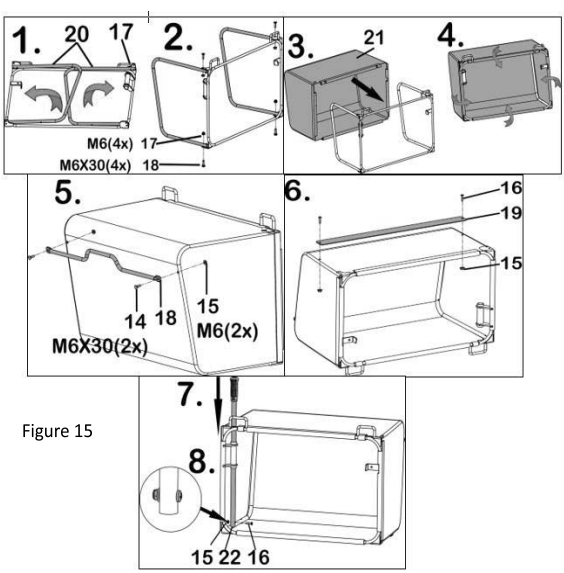

Figure 15

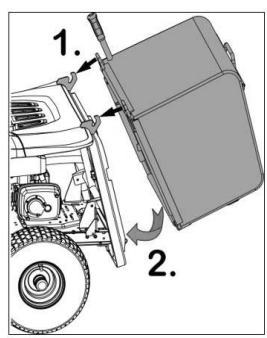

Figure 16

4.2 Install the battery

1. Connect the battery connectors to the machine connection leads and tighten the 2 screws, then cover the protective cap for the 2 wires. The red wire connects to the positive electrode **(+)**, and the black wire connects to the negative electrode **(-)** (Figure 17).

Figure 17

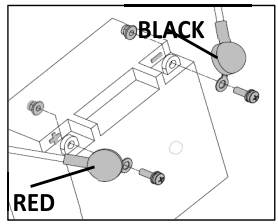

2. Secure the battery with the small rubber strap.

WARNING!

Danger if assembly is not carried out completely!

- **Do not operate the ride on mower before it has been fully assembled!**
- **Carry out all the work described in the assembly instructions. If you are uncertain about anything, ask a specialist to confirm that the assembly has been carried out correctly before the machine is started up!**
- **Check whether all safety and protective devices are in place and functioning correctly!**

5 CONTROLS

The ride on mower controls are described in the following, divided into components A, B, C, D, E, F and G (Figure 18).

Figure 18

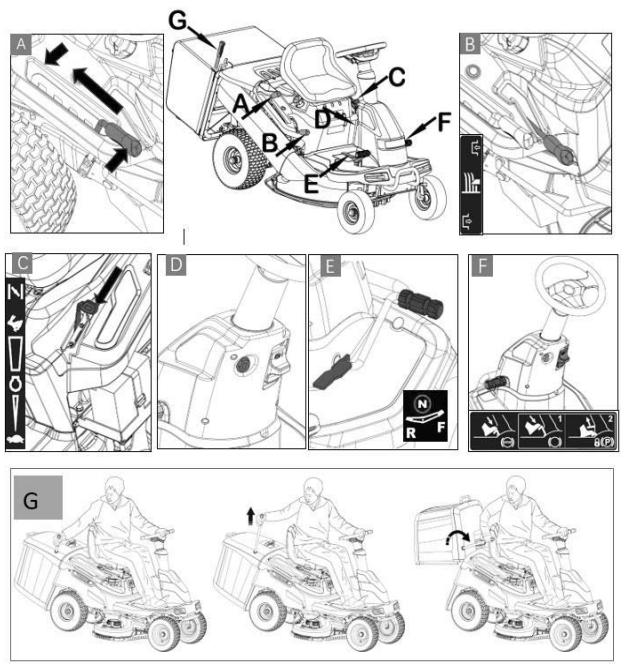

5.1 Controlling the engine speed

NOTE

Please note that operating the controller while driving can impact the speed!

For controller with integrated choke:

Pushing the controller (Figure 18 C) increases or reduces the engine speed; in the uppermost position, it engages the choke.

Use this position for starting the engine.
Mowing: In this position, the engine **MUST** run at the maximum speed.

Idling: In this position, the engine runs at the lowest speed.

5.2 Ignition lock (Figure 19 & Figure 20)

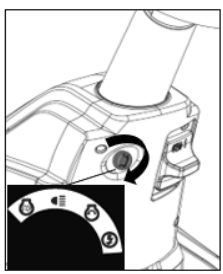

Figure 19

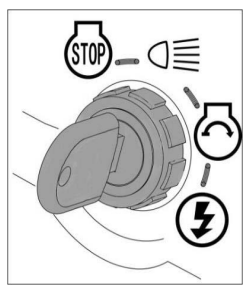

Figure 20

«OFF» everything is switched off.

«ON» activates all parts

«START» connects the starter motor. If you release the key on «START», it will automatically return to «ON».

The key sends power to the head lights when the switch is in the position.

5.3 Brake pedal

Brake

- With foot hydrostatic transmission: if you press the brake pedal (Figure 21 ①) all the way down (Figure 21 a), the drive is decoupled and the brake on the transmission is applied. The ride-on mower brakes.

Figure 21

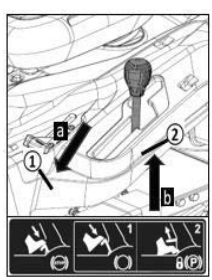

Parking brake

- With foot hydrostatic transmission: Pulling the locking lever (Figure 21 ②) upwards (Figure 21 b) while the brake pedal is pressed down locks the brake.

Pressing the pedal again releases the brake.

NOTE
The brake pedal must be pressed all the way down to start the engine.

5.4 Driving the mower

5.4.1 Driving directions

On ride on mowers with a foot hydrostatic transmission, there are two pedals on the right-hand side for forwards and reverse travel.

Direction of travel	Description
Forwards	Press the front pedal (Figure 18 E, Figure 22 ②) to drive forwards.
Reverse	Press the rear pedal (Figure 18 E, Figure 22 ③) to drive backwards. **Note:** The speed is limited when the mowing mechanism is switched on. Mowing in reverse (see chapter 7.6.2"Mowing in reverse")

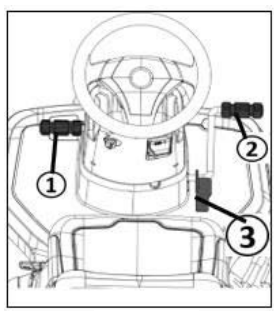

Figure 22

Moving off

When the engine is running,

1. Release the parking brake (Figure 18 F).
2. Select the direction of travel (Figure 18 E).

Increasing the speed

The further you press the pedal, the faster your speed will be in the selected direction.

5.5 Operating the mowing mechanism

Setting the cutting height

The ride on mower's mowing mechanism can be set to various heights using an adjusting lever (Figure 23 ①) on the

right next to the operator's seat.

1. Move the adjusting lever in the required direction (Figure 23 a, b, c):

- Lever downwards: low cutting height
- Lever upwards: high cutting height

Switching on the mowing mechanism

1. Set the uppermost cutting height with the adjusting lever.

Note: The mowing mechanism must always be started at the uppermost cutting height.

2. Pull the lever (Figure 24 ①) for switching on the mowing mechanism upwards (Figure 24 a) and engage it (Figure 24 b). The mowing mechanism is now running.

3. Set the required cutting height with the adjusting lever.

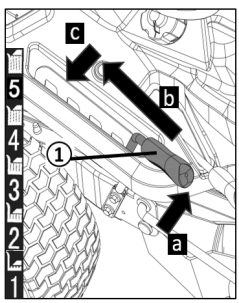

Figure 23

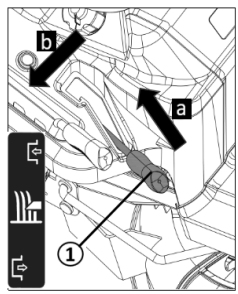

Figure 24

5.6 Reverse Mode Operation Button (RMO)

The reverse mode operation knob is located on the left of the height adjustment lever. The blades will stop when traveling in reverse. To keep the blades rotating when traveling in reverse, please press the RMO button (Figure 25).

NOTE: Mowing in reverse is not recommended.

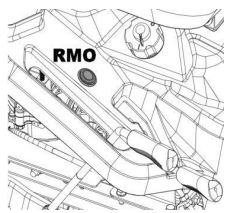

Figure 25

6 STARTING UP



WARNING!

Danger if assembly is not carried out completely!

Do not operate the ride on mower before it has been fully assembled!

Carry out all the work described in the assembly instructions. If you are uncertain about anything, ask a specialist to confirm that the assembly has been carried out correctly before starting the machine!

Check whether all safety and protective devices are in place and functioning correctly.

6.1 Checking the mowing mechanism

Before use, always look and check whether the cutter, fastening pin and/or the entire mowing unit are worn or damaged. Worn or damaged blades must be replaced with new ones in order to avoid any imbalances.

6.2 Filling the oil

NOTE

Must comply with the assembly instructions for filling the ride on mower with engine oil for the first time.

For the initial fill of the new engine. please add 800 mL (0.8 liter) of 10W30 engine oil.

NOTE

For more detailed information, please refer to the separate operating instructions for the engine.

Note that the oil level must be checked at regular intervals and oil must be replenished if necessary.

Use a suitable funnel or a filler pipe when pouring in the oil so that no oil is spilled on the engine, the housing or the ground.

1. Fold the seat (Figure 26) forwards.
2. Unscrew the oil filler neck (Figure 27 ①) cap.
3. Pour in oil until the oil level can be seen between the MIN and MAX marks on the oil dipstick (Figure 27 ②). Do not overfill the engine!
4. Screw the oil filler cap on again.
5. Fold the seat back.

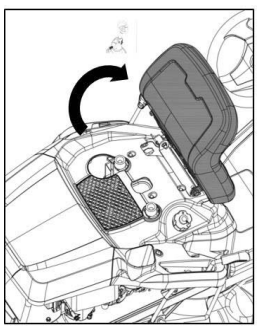

Figure 26

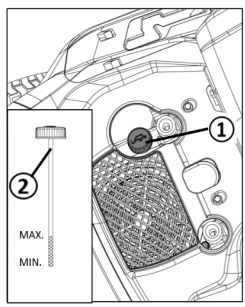

Figure 27

6.3 Filling with fuel

WARNING!

Dangers when handling fuel!

Fuel is highly inflammable. Only fill the fuel tank outdoors! Do not smoke! Do not refuel when the engine is running or is hot!

NOTE

For more detailed information, please refer to the separate operating instructions for the engine.

Use a suitable funnel or a filler pipe when refuelling so that no fuel is spilled on the engine, deck or the ground.

For safety reasons, the fuel tank cap and other tank caps must be renewed if damaged.

Do not start the engine if the fuel has overflowed.

The ride on mower must be removed from the area contaminated by fuel, and the spilled fuel must be absorbed and wiped away from the ground, the engine and the deck using a cloth.

Any attempt to start the mower must be avoided until the fuel vapours have evaporated.
Only keep the fuel in containers intended for this purpose.
Use unleaded petrol, octane 91 for the fuel.

Filling the tank

Figure 28

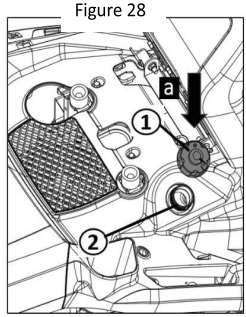

1. Switch off the engine and remove the ignition key.
2. Wait until the engine has cooled down (risk of explosion if the fuel catches fire!).
3. Fold the seat forwards.
4. Open the tank cap (Figure 28 ①) and pour the fuel into the tank (Figure 28 ②).

Note: Avoid overfilling the fuel tank!

5. Close the tank cap.
6. Fold the seat back.

6.4 Check tyre pressure

The correct tyre pressure is an important prerequisite for a correctly levelled mower deck, and hence for a uniformly mown lawn. Check the tyre pressure at regular intervals.

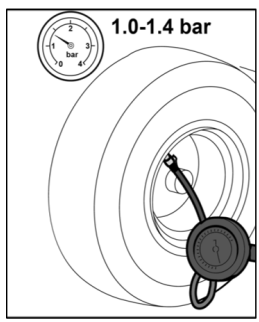

Figure 29

1. Park the ride on mower on firm and level ground and remove the ignition key.
2. Wait for approx. 1 hour after operation to allow the tyre to cool down. The tyre pressure can only be measured correctly when the tyre is cool.
3. Unscrew the valve cap and press a tyre pressure meter onto the open valve.
4. Read off the tyre pressure and compare it with the values given on the tyre: 1.0 – 1.4 bar (Figure 29).
5. If the tyre pressure is too low, pump up the tyre using a commercially available foot pump.

NOTE
1 – 1.4 bar = 14.5 – 20.3 PSI

6.5 Checking the safety devices

The safety devices must be checked each time before starting the ride-on mower.

WARNING!

Danger when checking the safety devices!

The safety devices may only be checked from the operator's seat and when no other persons or animals are in the vicinity!

Perform all checks on a level surface so that the ride on mower cannot roll away unintentionally.

6.5.1 Checking the brake contact switch

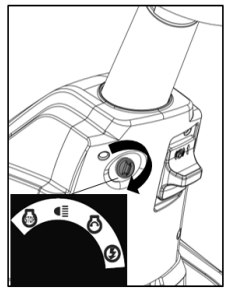

Figure 30

The brake contact switch ensures that the engine cannot be started if the brake is not applied.

With the engine turned off,

1. Sit on the operator's seat.
2. Release the parking brake by applying the brake pedal (Figure 18 F).
3. Release the brake pedal or the brake pedal again.
4. Attempt to start the engine, i.e. ignition key in position II (Figure 30).

NOTE

The engine should remain switched off.

6.5.2 Checking the mowing mechanism contact switch

The mowing mechanism contact switch ensures that the engine cannot be started if the mowing mechanism is activated.

With the engine turned off,

1. Sit on the operator's seat.
2. Apply the brake pedal or the brake pedal (see chapter 5.3 "Brake pedal").
3. Engage the mowing mechanism (see chapter 5.5 "Operating the mowing mechanism").
4. Attempt to start the engine, i.e. ignition key in position II (Figure 30).

NOTE

The engine should remain switched off.

6.5.3 Checking the seat contact switch

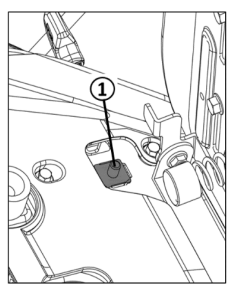

Figure 31

The seat contact switch (Figure 31 ①) ensures that the engine cuts off when nobody is on the operator's seat with the mowing mechanism switched on or when the parking brake is not locked.

1. Sit on the operator's seat.
2. Apply the brake pedal or the brake pedal (see chapter 5.3 "Brake pedal").
3. Start the engine and let it run at the maximum RPM (see chapter 7.4 "Starting and switching off the engine").
4. Engage the mowing mechanism (see chapter 5.5 "Operating the mowing mechanism").
5. Take your weight off the seat by standing up (do not get off!).

NOTE

The engine must switch itself off!

6.5.4 Visual inspection of the mowing mechanism and belt covers

Check that the mowing mechanism and belt covers are undamaged and thus prevent access to the mowing mechanism and the drive belts. If damaged, contact a customer service workshop for a replacement.

7 OPERATING THE RIDE ON MOWER

WARNING!

Dangers due to inadequate knowledge of the ride-on mower!

Pay particular attention to all safety instructions!

Carry out all assembly and start-up work conscientiously. Ask the manufacturer if you have any doubts!

7.1 Fundamental preparatory measures

- Always wear safety boots and long trousers while mowing. Never mow barefoot or when wearing open sandals.
- Check the complete area on which the ride on mower is to be used. Remove all stones, sticks, wires, bones and other foreign objects which could be scooped up and flung out. Also pay attention to foreign objects during mowing.
- Carry out all the work described in the startup instructions. This applies in particular to checking the safety devices.
- Transporting objects on the ride-on mower is prohibited!

7.2 Use of accessories

WARNING!

Danger due to incorrect accessories or incorrect use of accessories!

Only ever use genuine accessories from the manufacturer!

Using unauthorised accessories, or using accessories incorrectly, can expose the operator and other persons to significant risks. The ride-on mower could be overloaded. This can lead to serious accidents.

7.3 Pushing the ride-on mower

CAUTION!

Danger when pushing on slopes!

Only push the ride-on mower on horizontal surfaces! On slopes, the ride-on mower could roll downhill uncontrollably.

Pushing with a foot hydrostatic transmission

1. Release the parking brake (Figure 18 F) (see chapter 5.3 "Brake pedal").
2. Make sure that the driving pedal position is at "N".
3. Make sure that hydrostatic transmission disengagement lever (Figure 32 ①) is at "B" (Figure 32).

«A» = Transmission engaged: for all uses, when moving and during cutting;

«B» = Transmission disengaged: this makes it much easier to move the machine by hand, with the engine stopping.

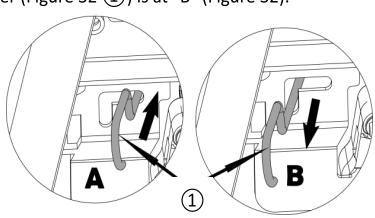

Figure 32

7.4 Starting and switching off the engine

Starting the motor

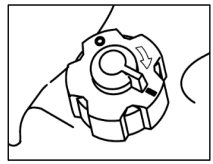

Figure 33

1. Turn on the fuel stopcock to position “**I**”, Figure 33.
2. Sit on the operator's seat.
3. Fully depress the brake pedal and lock it with the locking lever.
4. Make sure the mowing mechanism is not switched on. To do this, check the position of the lever (Figure 18 B).
5. With a foot hydrostat transmission: Make sure that the Driving pedal position is at "N".
6. Move the engine speed controller (Figure 18 C) to the frontend stop. The hare symbol is located there.
7. Insert the ignition key into the ignition lock.
8. Starting the engine (electrically):

■ Turn the ignition key to position "**II**" and hold it there until the engine is running.

Note: To reduce strain on the starter battery, do not attempt to start for any longer than about 5 seconds.

■ Then release the ignition key; it will automatically jump to position "**I**".

9. Starting the engine:

If the engine cannot be started with the electric starter, check the ride on mower for mechanical damage.

Switch off the engine

1. Turn off the mowing mechanism (Figure 18 B).
2. Make sure that the Driving pedal position is at "N".
3. Fully depress the brake pedal and lock it with the locking lever.
4. Turn the ignition key to the "**0**" position.
5. Remove the ignition key.



WARNING!
Danger if the engine is hot!
When stopping the engine, ensure that hot engine components such as the silencer cannot set fire to objects or materials located nearby!

7.5 Driving with the ride-on mower



WARNING!
Danger in case of inappropriate speed!
Drive slowly, especially at the beginning, in order to familiarize yourself with the driving and braking behaviour of the Ride on mower!
Before each change of direction, adjust the driving speed so as to maintain control of the ride on mower at all times and to prevent it from tipping over!

7.5.1 Starting off and stopping with foot hydrostatic transmission

1. Fully depress the brake pedal and lock it with the locking lever.
2. Set the mowing mechanism to the maximum cutting height (see chapter 5.5 "Operating the mower mechanism").
3. Start the motor (see chapter 7.4 "Starting and shutting off the engine").
4. Select the gear appropriate to the required direction of travel and driving speed.

5. Slowly press the foot pedal for the required driving direction:

- Forwards: Foot pedal (Figure 22 ②)
- Reverse: Foot pedal (Figure 22 ③)

6. The further you press the pedal, the faster the ride-on mower will drive in the selected direction.
7. To stop, release the foot pedal and press the brake pedal (Figure 22 ①).

NOTE

Whenever the driver is getting off from the ride-on mower:

Depress the brake pedal and actuate the locking lever so that the ride-on mower cannot roll away!

7.5.2 Preparing to drive at temperatures below 10 °C

1. Make sure the mowing mechanism is not switched on. To do this, check the position of the lever.
2. Start the engine and let it run for about 30 seconds to warm up and optimize the gear oil viscosity. You can then drive the ride-on mower. Do not switch on the mowing mechanism until the engine has been running for a few minutes.

7.5.3 Driving and mowing on slopes

WARNING!

Danger due to mistakes when driving on slopes!

Be particularly careful when driving on slopes! There is no such thing as a "safe" slope.

In particular, comply with the following safety instructions here!

Disengage the mowing mechanism and add-on devices if the wheels spin or the vehicle stalls when driving on a slope.

Then drive away down the slope slowly, straight along the fall line!

The weight of a full grass catcher increases the risk of the ride-on mower tipping over!

- Do not drive on gradients of more than 8° (15 %). Example: This corresponds to a change of 15 cm in height over a distance of 1 meter.
- Drive smoothly.
- Do not brake suddenly.
- Keep the driving speed low.
- Do not drive across the slope.
- Do not accelerate suddenly.
- Steer smoothly.

7.6 Mowing with the ride-on mower

Adapt the driving speed to the conditions of the lawn in order to achieve a tidy mowing result. Select a maximum of 2/3 of the possible driving speed for mowing. The maximum speed of the ride-on mower is exclusively intended for driving without the mowing mechanism switched on. Normally, the cutting height is 4 - 5 cm. This corresponds to the 2nd or 3rd detent of the height adjustment (Figure 18 A). Please mow with a higher cutting height if the grass is moist or wet. If the grass is very long, it is a good idea to mow in two passes, or reduce the height with a slasher. Set the mowing mechanism to the maximum cutting height on the first pass. You can reduce it to the required height for the second pass.

7.6.1 Switching on the mowing mechanism

NOTE

Do not switch on the mowing mechanism until the engine has been running for about one minute to warm up! The ride-on mower should not be standing in tall grass area when the mowing mechanism is engaged.

When the engine is running and the engine speed controller (Figure 18 C) is in the operating position (see chapter 7.4 "Starting and switching off the engine"),

1. Set the uppermost cutting height with the adjusting lever.

Note: The mowing mechanism must always be started at the uppermost cutting height.

2. Pull the lever for switching on the mowing mechanism upwards and engage it. The mowing mechanism is running.
3. Set the required cutting height with the adjusting lever.
4. Moving off with the ride-on mower:

- Foot hydrostatic transmission: see chapter 7.5.1 "Starting off and stopping with foot hydrostatic transmission"

7.6.2 Mowing in reverse



WARNING!

When reverse mowing, there is a higher risk of accidents!

Pay attention to the area behind you when mowing in reverse!

Only mow in reverse when it is necessary to do so!

To enable the machine to mow in reverse drive, the following operations must be performed:

1. Starting the engine (see chapter 7.4 "Starting and switching off the engine").
2. Bring the machine to a standstill.
3. Engage the blade drive.
4. Press the RMO button.
5. Drive the machine in the opposite direction; mowing function in reverse is now activated.

After engaging the reverse gear, you can release the reverse mowing button.

Use the reverse mowing enable function only if strictly necessary.



Note

The reverse mowing function will only be turned off after turning off the engine.

7.6.3 Switching off the mowing mechanism



WARNING!

Danger due to spinning blades!

When the cutting blades are still spinning, they can cause laceration injuries to hands and feet! As a result, keep your hands and feet away from the cutters!

1. To shut off the mowing mechanism, pull the mower mechanism lever (Figure 18 B) out of the detent and push the lever completely downwards.
2. The mowing mechanism can be shut off when the ride-on mower is stationary and also while it is moving.



WARNING!

Risk of injury due to objects being thrown out!

When crossing areas of gravel and crushed stone, objects can be drawn into the running mowing mechanism and then thrown out.

- Always switch off the mowing mechanism if you are driving over surfaces other than lawns.

7.6.4 Mowing interval

Please take into account that grass grows differently at different times. We recommend using a shorter interval between mowing during early spring. You can increase the mowing intervals as the growth rate of the grass begins to decline during the course of the year.

If you are unable to mow the grass for an extended period, you should initially select a higher cutting height setting, then re-mow two days later with a lower cutting height setting.

7.6.5 Mowing high grass

Mow with a higher cutting height adjustment when the grass is longer than normal or when it is wet. Then re-mow the grass with a lower, normal setting.

7.6.6 Cutting blade maintenance

Make sure that the cutting blade remains sharp for the entire mowing season to avoid shredding or tearing the blades of grass. Shredded grass blades turn brown on the edges. This reduces their growth and leaves the lawn prone to diseases.

- Check the cutting blade for sharpness and signs of wear or damage after each use! If necessary please contact a service workshop for replacement.
- If replacement is required, only use original manufacturer replacement blades.

8 CLEANING THE RIDE-ON MOWER

The ride-on mower must be cleaned regularly to ensure optimum function and a long service life.
Clean the ride-on mower after each use to remove adhering soiling.
Do not use a high-pressure cleaner for cleaning.
The water jet from a high-pressure cleaner or a garden hose can damage the electrical system or bearings.
In particular, make sure that no water comes into contact with the engine, transmission and deflection pulleys, as well as the entire electrical system.



WARNING!
Dangers when cleaning!
During all cleaning work:

- Switch off the engine and remove the ignition key.
- Remove the spark plug connector.
- Protective devices removed for cleaning must be reinstalled afterwards.
- **DANGER OF BURNS:** Do not clean the lawn tractor until it has cooled down. The engine, transmission and silencer get very hot!
- **DANGER OF LACERATIONS**:

When working on the cutters, pay attention to the sharp blades. In mowers with more than one blade, moving one cutter can cause the other to move as well!

8.1 Cleaning the deck, engine and transmission

Do not use water or a high-pressure cleaner to spray down the engine or any of the bearing points (wheels, transmission, blade bearing).
Water penetrating the ignition system, carburetor and air filter can cause malfunctions. Water in the bearing points can lead to loss of lubrication, and thus cause irreparable damage to the bearings.
Use a cloth, hand brush, long-handled paintbrush or similar for removing dirt and grass residues.

IMPORTANT!
Water can cause damage to the electrical system!
When cleaning the ride-on mower with water, make sure that no water enters the electrical system!

8.2 Cleaning the mowing system

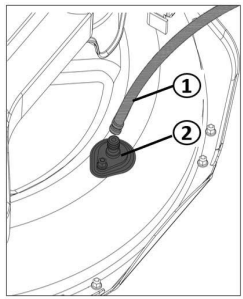

Figure 34

There are connections for a 1/2" water hose coupling on the mower deck. The mowing system can be cleaned by connecting a water hose.

The grass catcher must be mounted during the cleaning process.

1. Connect the water hose (Figure 34 ①) to the cleaning fitting (Figure 34 ②) and turn on the water.
2. Start the engine and set it to a medium engine speed (see chapter 7.4 "Starting and switching off the engine").
3. Lower the mowing mechanism to the lowest cutting height (see chapter 5.5 "Operating the mowing mechanism").
4. Switch on the mower mechanism.
5. The mowing system will be cleaned within a few minutes.
6. Switch off the mowing mechanism.
7. Switch off the engine.
8. Turn off the water and disconnect the hose.
9. Start the engine again and allow the mowing mechanism to run for a few more minutes in order to fling out the water.

8.3 DISMANTLING , SHARPENING AND BALANCING THE BLADE

Check that the blade is sharpened properly and firmly fixed to the bracket.

A badly sharpened blade pulls at the grass and causes the lawn to turn yellow.

A loose blade causes unusual vibrations and can be dangerous.

WARNING!

All operations on the blade (dismantling, sharpening, balancing, remounting and/or replacing) require a certain familiarity and special tools. For safety reasons, visit a specialized center if you do not have the right tools or experience.

To remove the blade, hold it firmly wearing strong gloves and undo the central screw (Figure 35 ①).

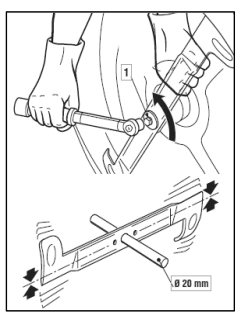

Figure 35

Sharpen the two cutting edges using a medium grade grinding wheel and check the balance by holding the blade up with a round Ø20 mm bar inserted in the central hole.

To ensure that it works properly without unusual vibrations, any imbalance between the two parts of the blade must be below one gram.

WARNING!

Always replace the damaged or bent blade; never try to repair it!

ALWAYS USE MANUFACTURER'S GENUINE REPLACEMENT BLADES!

When re-fitting the blade, always follow the indicated sequence, making sure that the blade's wings are facing towards the interior of the cutting deck and that the concave part of the cup spring (Figure 36 ①) is pressing against the blade.

Tighten the fixing screw (Figure 36 ②) using a torque wrench set to 45-50Nm.

If the shaft hub (Figure 36 ③) came off when dismantling the blade, make sure that the key (Figure 36 ④) is firmly in

its right position.

The blade should be stop within 3 seconds after the operator disengages the blade control lever or leaves the seat. If the blade does not stop quickly, please do not use the ride on mower and send in to an authorised after-sales centre for repair.

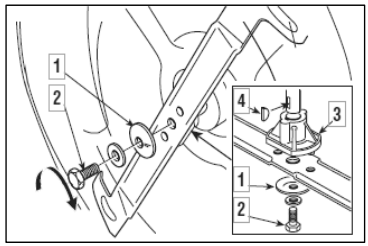

Figure 36

8.4 Replacing a fuse

The machine is fitted with 20A fuses (Figure 37). When it blows, the machine stops, the dashboard light switches off, the battery gradually runs out, and the machine will have problems starting.

Remove the fuse and replace with a same type fuse.

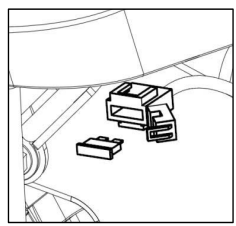

Figure 37

9 MAINTENANCES

WARNING!

Dangers during maintenance!

During all maintenance work:

- Switch off the engine and remove the ignition key.
- Remove the spark plug connector.
- Protective devices removed for maintenance must be reinstalled afterwards.
- **DANGER OF BURNS:** Do not work on the ride-on mower until it has cooled down. The engine, transmission and silencer get very hot!

■ DANGER OF LACERATIONS:

When working on the cutters, pay attention to the sharp blades. In mowers with more than one blade, moving one cutter can cause the other to move as well.

- Parts are only allowed to be replaced by genuine spare parts.
- If in doubt, always visit a specialist workshop or contact the manufacturer.

9.1 Maintenance schedule

The following jobs are allowed to be carried out by the user independently. All other maintenance, service and repair work must be carried out in an authorised service workshop. In addition, please also comply with the recommended annual lubrication tasks as indicated in the lubrication plan.

Activity	Before each use	After each use	After the first 5 hours	Every 25 operating hours	Every 50 operating hours	Each time before putting into storage
Checking the engine oil level*	X					
Changing the engine oil*			X			X
Cleaning the air filter*				X		
Replacing the air filter*					X	
Checking the spark plug*					X	
Checking the brake (test braking on a straight path)	X					

Activity	Before each use	After each use	After the first 5 hours	Every 25 operating hours	Every 50 operating hours	Each time before putting into storage
Check the tyre pressure	X					
Check the mowing blades	X					
Checking for loose parts	X					X
Checking V-belts (visual check)				X		
Cleaning the ride-on mower		X				
Cleaning the air intake grille on the engine*	X					
Clean the transmission to remove grass and mowing residues		X		X		

* Refer to the operating instructions of the engine manufacturer

NOTE

It may be necessary to shorten the maintenance intervals compared to those stated in the table above in case of severe loading and at high temperatures.

9.2 Lubricating plan

To ensure that moving parts can move freely, we recommend lubricating the following points at least once a year.

Use a cloth to clean all points to be lubricated before greasing or spraying. Do not use water, so as to avoid possible corrosion.

Lubrication points:

- Spray oil onto the bearings of the front axle on the frame.
- Pivoting and bearing points: Lubricate all movable pivoting and bearing points.

9.3 Cleaning the air filter

The air filter must be cleaned according to the maintenance schedule. To remove the air filter proceed as follows:

IMPORTANT!

Risk of property damage!

Engine components can be damaged due to dirt ingress when cleaning the air filter!

- **Make sure that the area surrounding the air filter is clean and that no dirt gets into the intake port of the engine when the air filter is pulled off.**

1. Switch off the engine and remove the ignition key.
2. Wait until the engine has cooled down.
3. Unscrew the mounting screw (Figure 38 ①).
4. Pull the air filter cover (Figure 38 ②) upwards off the guide.
5. Pull the air filter (Figure 38 ③) off the guide.
6. Clean the air filter or replace it if necessary.
7. Reinstall the air filter in reverse order and tighten the mounting screw again.

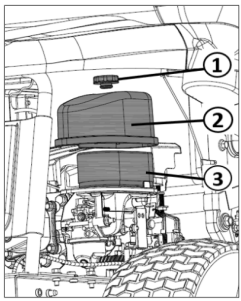

Figure 38

9.4 Checking the spark plug

The spark plug must be checked according to the maintenance schedule and replaced when necessary.

Spare spark plug:

Please note that the spare spark plug used by the equipment manufacturer may differ from the engine manufacturer's specifications due to specific applications.

NOTE

For more detailed information, please refer to the separate operating instructions for the engine.

NOTE

All work on the spark plug is only allowed to be carried out when the engine is stopped and has cooled down fully.

NOTE

Always replace the old spark plug with a new spark plug with the same characteristics.

1 Remove the spark plug connector (Figure 39 ②) from the spark plug (Figure 39 ①).
2. Unscrew the spark plug with the supplied spanner (Figure 40).
3. Check the electrode gap (Figure 40 A) and reset it if necessary.

Note: The correct electrode gap can be found in the operating instructions from the engine manufacturer.

7. Screw the spark plug in to the end stop with the supplied spanner and tighten it.
8. Push the spark plug connector back onto the spark plug.

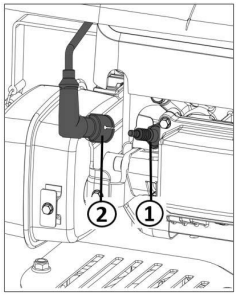

Figure 39

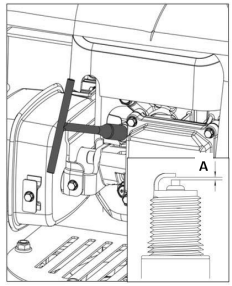

A

Figure 40

9.5 Adjusting the Bowden cable for the mowing mechanism

WARNING!
Risk of injury!
Any work on the mowing mechanism must only be carried out when the engine is switched off!

If the mower mechanism can no longer be switched on or off again, the switching mechanism on the Bowden cable can be adjusted.

NOTE
If the mowing mechanism cannot be switched on or off at all, have your ride-on mower checked and repaired by your customer service workshop.

- To adjust the Bowden cable (Figure 41 ①), loosen the two nuts (Figure 41 ② and ③).
- If the mowing mechanism can no longer be switched on correctly, loosen the nut (Figure 41 ③) and adjust the Bowden cable with the nut (Figure 41 ②) until the mowing mechanism can be switched on correctly again.
- If the mowing mechanism can no longer be switched off correctly, loosen the nut (Figure 41 ②) and adjust the Bowden cable with the nut (Figure 41 ③) until the mowing mechanism can be switched off correctly again.

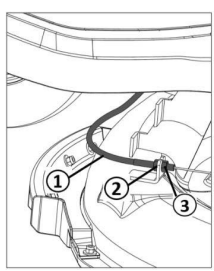

Figure 41

9.6 Starter battery

The ride-on mower does not come with a charger for the starter battery.

Precise battery designation: see battery box. The starter battery is located under the engine cover.

The starter battery is always supplied from the factory pre-charged.



WARNING!

Danger if the starter battery is not handled correctly!

The following points must be complied with to avoid the dangers arising from incorrect handling of the battery!

- Do not store the starter battery in the immediate vicinity of naked flames, do not burn it or place it on heaters. Risk of explosion.
- Store the starter battery in a cool, dry room (10 - 15 °C) over the winter. Avoid storing at temperatures below the freezing point.
- Do not leave the starter battery without charge for a long period. If the starter battery is not used for a long period, it should be charged using a suitable charger.
- Do not smash the starter battery. The electrolyte (sulphuric acid) causes chemical burns to the skin and clothing – immediately rinse away with plenty of water.
- Keep the starter battery clean. Only wipe clean with a dry cloth. Do not use water, petrol, thinners or similar for this purpose.
- Keep the connection terminals clean and grease them with terminal grease.
- Do not short-circuit the connection terminals.

Charging the starter battery

Charging is required:

- Before putting into storage before the winter break.
- If the machine will not be used for a long time (longer than 3 months).



WARNING!

Danger if the starter battery is not charged correctly!

The charging current of the charger must not exceed 5Ah, and the charging voltage can only be max. 14.4 V. Risk of explosion of the starter battery if the charging current is more powerful! Always remove the ignition key before starting work on the battery.

We recommend charging this maintenance-free, gas-tight starter battery using a specifically suitable charger (which can be obtained through retail outlets).

Comply with the operating instructions of the charger manufacturer before and during charging of the starter battery.



CAUTION!

Danger of a short circuit!

To avoid a short circuit, always disconnect the negative cable (-) of the battery first, and reconnect it last! Always remove the ignition key before starting work on the battery!

1. Remove the ignition key.
2. Connect the charger terminals to the connection terminals of the battery.



NOTE

Check the polarity:

- **Red terminal = positive terminal (+)**
- **Black terminal = negative terminal (-)**

1. Connect the charger to the mains and switch it on.

10 TRANSPORT

When transporting the ride-on mower using transport equipment (e.g. passenger car trailer), the mowing mechanism must be supported from below to reduce the strain on the mowing mechanism mounting.

During transport, make sure that the means of transport has a sufficient load capacity and that the ride-on mower is

suitably secured.

11 STORAGE

Protection against weather effects

The ride-on mower should be parked where it is protected against the effects of weather, especially moisture, rain and lengthy exposure to direct sunlight. Particularly the UV radiation contained in sunlight can cause plastic parts to fade, and damage them, in the event of long-term exposure. The use of a ride on mower cover is recommended.

Parking the ride-on mower

Never store the ride-on mower with fuel in the tank inside a building in which fuel vapours may possibly come into contact with naked flames or sparks. Only park the ride-on mower in rooms that are suitable for storing motor vehicles.

Long periods of storage

If possible, the ride-on mower should not be stored for long periods, e.g. over winter, with a full fuel tank. The fuel can evaporate.

Before long-term storage, the fuel should be drained from the tank and the carburettor in order to avoid any build-up of deposits, which could result in problems when starting. Please contact your specialist workshop for advice.

12 TROUBLESHOOTING



CAUTION!
Risk of injury
Sharp-edged and moving appliance parts can lead to injury.

- Always wear protective gloves during maintenance, care and cleaning work.



NOTE
For malfunctions that are not listed in this table or that you cannot resolve yourself, please contact our customer service.

Problem	Possible cause(s)	Remedy
Lighting does not function	1. Headlight wire connector not connected.	Stop the key to «STOP» position and connect the headlight wire.
	2. Bulbs defective.	Stop the key to «STOP» position and replace the bulbs.
	3. Battery not connected correctly.	Connect red cable to the (+) battery terminal and black cable to (–) battery terminal.
	4.Ignition switch defective	Replace ignition switch
	5. Battery defective	Test and recharge or replace the battery
	6. Short-Circuit in wire harness	Contact your Dealer or Service center
Start motor will not turn engine	1. Starting conditions have not been met	Check that all starting conditions are met
	2. No fuel in fuel tank.	Stop the key to «STOP» position and refuel the fuel tank.

	3. Poor contact between cable and battery pole.	Check the connections.
	4. Battery flat or defective	Test and recharge or replace the battery.
	5. Fuse defective.	Replace fuse. If the fuse blows repeatedly, determine the cause (usually a short-circuit).
	6. Clogged air filter	Clean air filter.
	7. Spark Plug defective.	Check the connection of spark plug socket, Clean or replace the spark plug.
	8. Brake pedal defective.	Contact your Dealer or Service center.
	9.Clutch/brake switch not pushed down.	Press the PTO Button to the OFF position.
	10. Start relay defective	Replace the start relay.
	11.Ignition switch start defective	Replace ignition switch start.

Problem	Possible cause(s)	Remedy
Engine runs unevenly	1. Carburetor problem	Contact your Dealer or Service center.
	2. Air filter blocked.	Clean or replace the air filter.(See engine manual)
	3. Fuel tank ventilation blocked.	1.Check and replace the fuel filter if necessary; (see engine manual or contact your Dealer or Service center.) 2. Empty the fuel tank and refuel with fresh fuel;
	4. Grass is too high	Reduce the travelling speed according to the height of the grass and/or raise the cutting height.
Engine feels weak	1. Air filter blocked.	Clean or replace the air filter. (See engine manual)
	2. Engine speed too low	Increase throttle.
	3.Travelling speed too high.	Set to a lower travelling speed.
	4. Spark Plug defective.	Replace the spark plug; see engine manual.
	5. Fuel tank ventilation blocked	1.Check and replace the fuel filter if necessary; (see engine manual or contact your Dealer or Service center.) 2. Empty the fuel tank and refuel with fresh fuel;
Battery does not charge	1. Fuse defective.	Replace fuse. If the fuse blows repeatedly, determine the cause (usually a short-circuit).
	2. Poor contact between battery poles and cables.	Check the connections.

Machine doesn't move	1.Brake is engaged	Keep the brake pedal pressed down and release the parking brake, release the brake pedal slowly to start forward movement of the machine.
	2.Drive belt detached	Fit belt in place.
	3.Drive belt defective or worn	Replace drive belt.
Strong vibrations	1. Blades loose.	Check and tighten all the blades (see Torque tightening par. 6.4.4) or contact your Dealer or Service center.
	2. Engine loose.	Check and tighten all the engine and frame bolts
	3. Unbalance in one or both blades resulting from damage.	Contact your Dealer or Service center.
	4.Engine mounting not securely tightened	Tighten engine mounting or contact your Dealer or Service center.

Problem	Possible cause(s)	Remedy
Uneven or poor cutting results	1. Blades blunt or worn	Sharpen or replace mowing blades
	2. Different air pressures in tires on left and right side.	Check the tyre pressure.
	3.Cutting deck adjustment.	Check deck adjustment
	4.Long and/or wet grass	Adapt cutting level and driving speed to the mowing conditions.
	5.Travelling speed too high.	Set to a lower travelling speed.
	6. Grass stuck under cutting deck	Cleaning inside the deck properly (Use a suitable accessory to access the cleaning of the cutting deck)

If problems persist after having performed the above operations, contact your Dealer or Service center.

13 TECHNICAL DATA

Model	HMR12/30C
Engine model	LC1P85FA
Engine displacement	352CC
Nominal power:	7.2Kw
Max. engine speed:	2800RPM
Cutting width	30″
Speed Forward（km/h）	0-7.5

Speed Reverse（km/h）		0～3.5
Tires Front/Tires pressure		11x4-5/1.4 bar
Tires Rear/Tires pressure		15×6.0-6/1.2 bar
Turning radius		**450mm**
N.W.		155K
Cutting Heights		30~85mm
Fuel tank capacity		5.5L
Cutter head height adjustment gear		5
Collector capacity(L)		130
Sound pressure level at the operator		L_{PA}: 88.3 dB(A), K_{PA}: 3 dB(A)
Measured sound power level		L_{WA}: 96.61 dB(A), K_{WA}: 0.90 dB(A)
Guaranteed sound power level (2000/14/EC)		L_{WA}: 100 dB(A)
Vibration	**Hand-arm**	a_h: 2.789 m/s^2, K_h: 1.5 m/s^2
	Whole body	a_h: 1.564 m/s^2, K_h: 1.5 m/s^2
Weight		134kg
Driving speed		Forward: 0-7.0 km/h, Reverse: 3.4 km/h

13.1 Machine dimensions

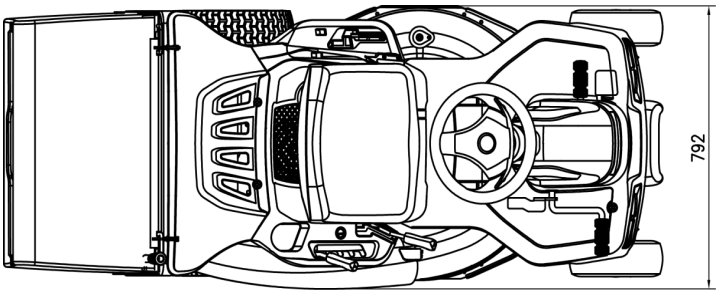

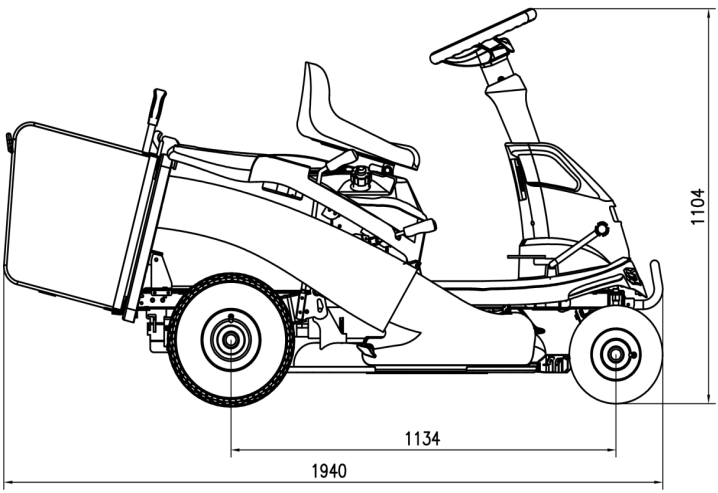

14 GUARANTEE

14.1 Warranty period

This ride on mower is designed for domestic use only. The warranty period for the mower is 3 years from the purchase date. Engine warranty is 2years.

14.2 Exclusions

Warranty will not cover:

- Pieces worn out due to normal wear and tear.
- Misuse, negligence of care, and lack of maintenance.
- Failures due to using non genuine replacement parts

Warranty will be voided if the machine has been modified in any way.

15 ILLUSTRATED PARTS LIST

Engine

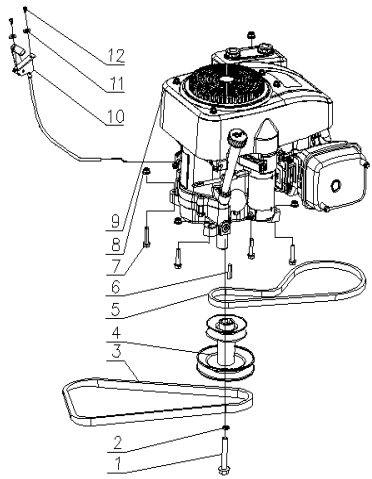

Ref #	Part No.	Description	Qty
0	40054075	Engine – L352CC	1
1	20061320	Outer Hex Inch Bolt 7/16"-20-1"	1
2	20061455	Spring Washer 7/16"	1
3	20093376	Deck Belt(5L-490)	1
4	20093348	Pulley, Engine	1
5	20093380	Transmission Belt	1
6	20070519	Flat Key 6.35x30	1
7	20061264	Hexagon Flange Bolt M8x35	4
8	20061348	Hexagon Flange Locking Nut M8	4
9	20093353	Loncin Engine-352CC (without fuel tank)	1
10	20092733	Throttle Cable	1
11	20061531	Washer	2
12	20055753	Cross Recess Pan Head Screw M4X8	2

Hood Cover Assembly

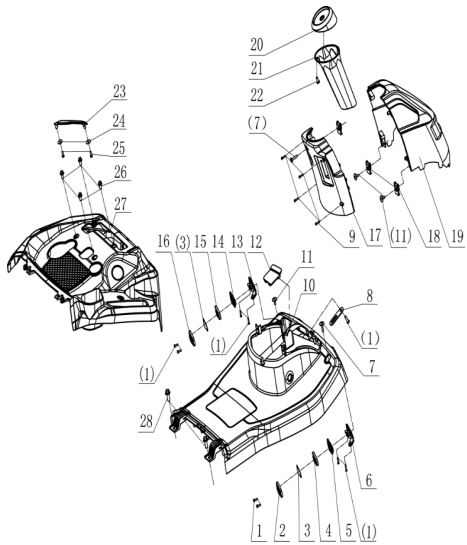

Ref #	Part No.	Description	Qty
0	40054074	Hood Cover Assembly	1
1	20051827	Screw ST4.8x13	9
2	20090502	Headlight Fixing Strip (Right)	1
3	20090507	Headlight Harness	2
4	20090497	Headlight Spotlight (Right)	1
5	20090491	Headlight Transparency Cover (Right)	1
6	20090482	Headlight Base (Right)	1
7	20090853	Screw M6x30	2
8	20050895	Ignition Wire Clamp	1
9	20051807	Screw ST4.8x19	4
10	20092887	Cover Base	1
11	20060893	Screw M6x16	3
12	20092724	Base Decoration cover	1
13	20090486	Headlight Base (Left)	1
14	20090501	Headlight Transparency Cover (Left)	1
15	20090496	Headlight Spotlight (Left)	1
16	20090498	Headlight Fixing Strip (Left)	1
17	20092743	Steering Column Rear Cover	1
18	20070630	Nut M6	3
19	20092741	Steering Column Front Cover	1
20	20092718	Steering Column Round Cover Cap	1
21	20092745	Steering Column Round Cover	1
22	20051792	Screw ST4x10F	1
23	20093347	Rear Base Decoration Cover	1
24	20071676	Gasket 6.5x25x1.4	2
25	20084298	Screw ST4.8x16	2
26	20061411	Screw M5x12	4
27	20092840	Rear Cover Base	1
28	20082800	Screw	2

Frame Assembly

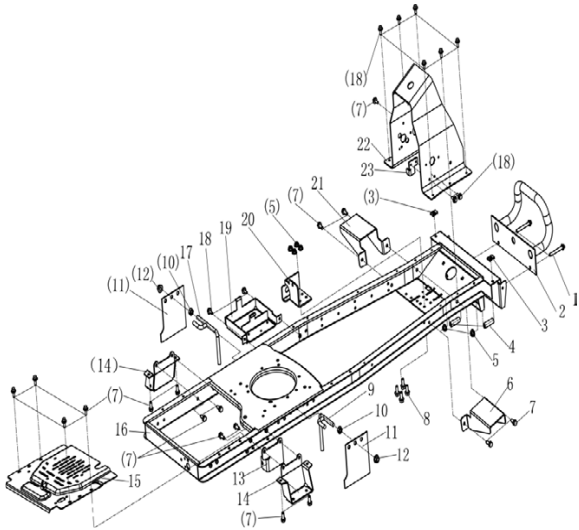

Ref #	Part No.	Description	Qty
0	40054368	Chassis assembly	1
1	20061310	Hexagonal Flange Bolt M8x65	2
2	20093402	Front Bumper	1
3	20070630	Nut M6	2
4	20093759	Front Axle Seat Liner	2
5	20061348	Locking Nut M8	6
6	20093956	Right Support Frame	1
7	20082799	Hexagon Flange Self-Tapping Nut M8X20	17
8	20061274	Hexagonal Flange Bolt M8X20	4
9	20093199	Belt Keeper (Right)	1
10	20061399	Hexagonal Nut M10	2
11	20094143	Tower Wheel Plate	2
12	20061419	Hexagon Locking Nut M10X1.5	2
13	20092835	Brake Cable Holder	1
14	20095778	Rear Axle Bracket (Right)	2
15	20094366	Rear Cover	1
16	20093321	Frame - Assembly	1
17	20093189	Belt Keeper (Left)	1
18	20082800	Locking Screw M6X16	12
19	20092837	Battery Bracket	1
20	20094141	Cable Fixing Plate	1
21	20093957	Left Bracket	1
22	20092874	Steering Column Bracket	1
23	20092889	Parking hook Plate Base	1

Front Axle Assembly

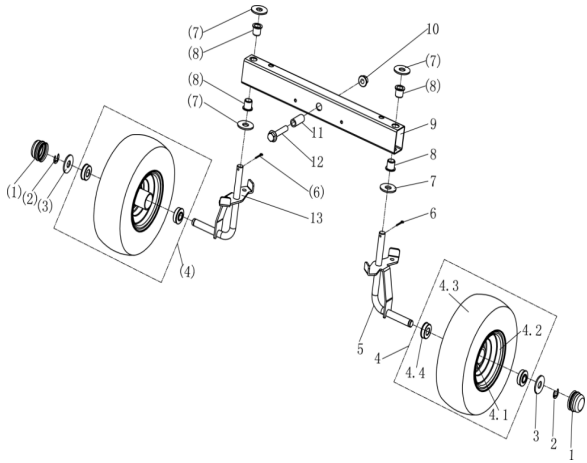

Ref #	Part No.	Description	Qty
0	40054067	Front Axle Assembly	1
1	20068187	Hub Cap	2
2	20061473	Retainer Clip 12	2
3	20070553	Washer	2
4	20086522	Wheel Assembly	2
4.1	20070559	Front Rim Hub XC62, 147x89	2
4.2	20061627	Flange Bearing 1635	4
4.3	20093129	Front Tyre 11x4.0-5	2
5	20093324	Front Axle Assembly (Right)	1
6	20061591	Pin 3.2x25	2
7	20061437	Washer 16x32x3	4
8	20070551	Bush XC62	4
9	20094137	Front Axle Centre Connector Tube	1
10	20061359	Nut M12x1.25	1
11	20093394	Front Axle Tube	1
12	20061287	Bolt M12x1.25x60	1
13	20093395	Front Axle Assembly (Left)	1

Rear Axle Assembly

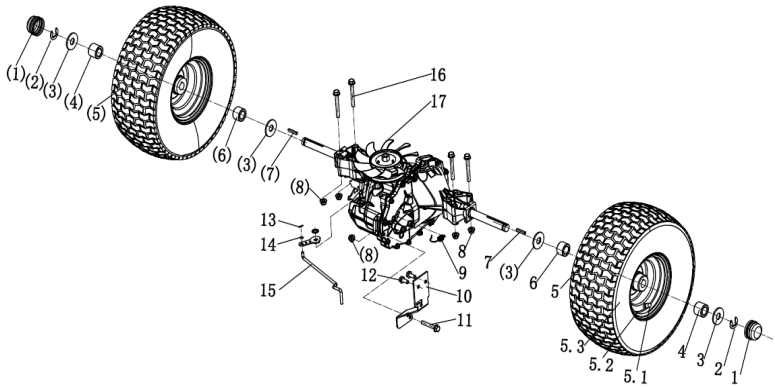

Ref #	Part No.	Description	Qty
0	40054371	Rear Axle Assembly	1
1	20068187	Hub Cap XC62/XCT102	2
2	20061430	Retainer Clip 15	2
3	20071143	Rear Wheel Washer XCT102	4
4	20090165	Rear Wheel Outer Gasket	2
5	20092228	Rear Wheel Assembly 15x6-6	2
5.1	20061665	Rear Tyre Valve	1
5.2	20090166	Rear hub	1
5.3	20093130	Rear Tyre	1
6	20071171	Rear Wheel Gasket	2
7	20070494	Key 4.75x4.75x30	2
8	20061348	Nut M8	5
9	20093339	Reset Spring	4
10	20095770	Rear Axle Retaining Plate	1
11	20061230	Bolt M8X50	1
12	20061053	Screw M8x20	2
13	20059765	Pin	1
14	20061425	Washer 6	1
15	20084654	Push Rod	1
16	20061310	Bolt M8X65	4
17	20089029	Hydraulic Drive Axle	1

Steering Assembly

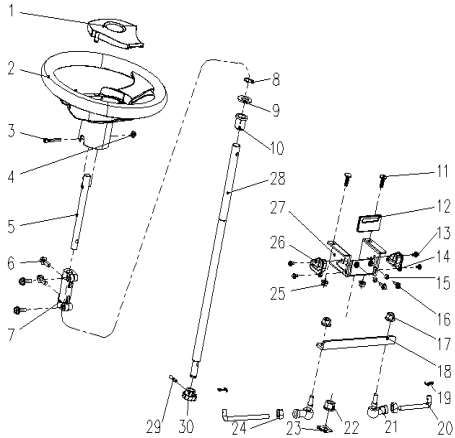

Ref #	Part No.	Description	Qty
0	40054071	Steering Assembly	1
1	20070945	Steering Wheel Cover	1
2	20070944	Steering Wheel	1
3	20060880	Screw M6x35	1
4	20061385	Hexagon Flange Locking Nut M6	1
5	20084468	Steering Wheel Rod	1
6	20061298	Hexagon Flange Bolt M8x25	4
7	20079989	Coupling	1
8	20061488	Snap Ring 19	1
9	20061444	Washer 20	1
10	20070566	Steering Bushing	1
11	20078739	Bolt M8X25	2
12	20092744	Protection Plate	1
13	20061411	M5 Self-Tapping Screw	4
14	20093195	Guide Plate (Right)	1
15	20061390	Hexagon Nut M6	2
16	20061196	Hexagon Flange Bolt M6X25	2
17	20061415	Hexagon Locking Nut M8	2
18	20093769	Steering Gear Plate	1
19	20061591	Pin 3.2X25	4
20	20093355	Steering Rod	2
21	20093346	Bearing M8	2
22	20070612	Hexagon Axle Bushing	1
23	20085898	Baffle Plate	1
24	20061396	Hexagon Nut M8	2
25	20061348	Hexagon Flange Locking Nut M8	2
26	20093188	Guide Plate (Left)	1
27	20093190	Steering Column Base	1
28	20092870	Steering Column	1
29	20061569	Elastic Cylinder Pin	1
30	20070776	Steering Gear	1

Drive Assembly

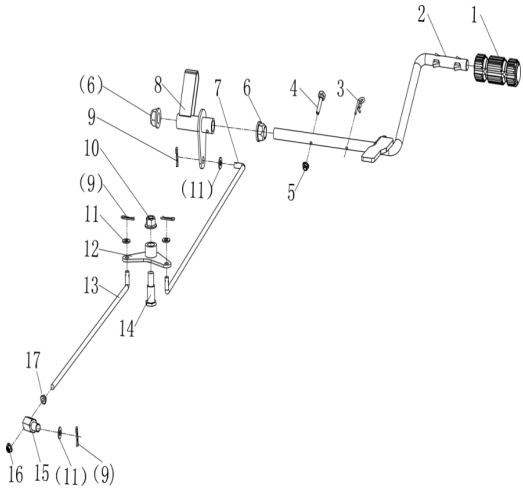

Ref #	Part No.	Description	Qty
0	40054069	Drive Assembly	1
1	20092796	Accelerator Pedal	1
2	20093328	Accelerator Driving Lever	1
3	20071251	Elastic Pin 3	1
4	20094138	Step Bolt M6	1
5	20061385	Hexagon Flange Locking Nut M6	1
6	20070612	Hexagonal Bushing	2
7	20093399	Shift Lever (Front)	1
8	20093322	Walking Switch Pressure Plate	1
9	20070582	Elastic Pin (Small)	4
10	20061359	Hexagon Flange Locking Nut M12X1.25	1
11	20061544	Washer 8.1x17x1.6	4
12	20093357	Connecting Plate Weldment	1
13	20093363	Shift Lever (Rear)	1
14	20092803	Step Bolt M12X1.25	1
15	20061369	Pin	1
16	20085751	Hexagon Nut 10X1.25	1
17	20061403	Flange Nut M10X1.25	1

Brake Assembly

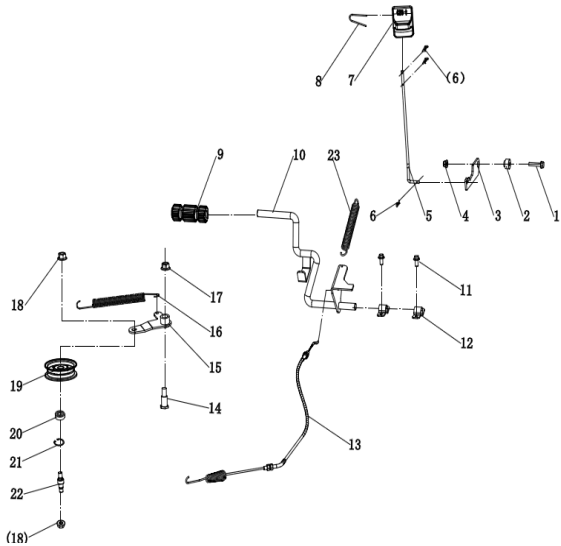

Ref #	Part No.	Description	Qty
0	40054369	Brake Assembly	1
1	20061264	Bolt M8x35	1
2	20092758	Limit Plate Support Sleeve	1
3	20092868	Limit Plate	1
4	20061348	Nut M8	1
5	20092827	Parking Brake Rod	1
6	20070582	Spring Pin	3
7	20084583	Parking Handle	1
8	20084581	U Bolt	1
9	20092796	Brake Pedal	1
10	20093388	Brake Pedal Lever	1
11	20082800	Screw	2
12	20092833	U Shape Press Plate	2
13	20093360	Brake Cable	1
14	20092803	Screw M12x1.25	1
15	20093382	Driving Tensioning Arm	1
16	20093359	Driving Spring	1
17	20061359	Nut M12x1.25	1
18	20061405	Nut M10x1.25	2
19	20070536	Tensioning Pulley	1
20	20061626	Bearing 6301-2RS	1
21	20061549	Spring Washer	1
22	20095775	Cutting Tensioning Shaft	1
23	20070515	Spring 2x12	1

Deck Assembly

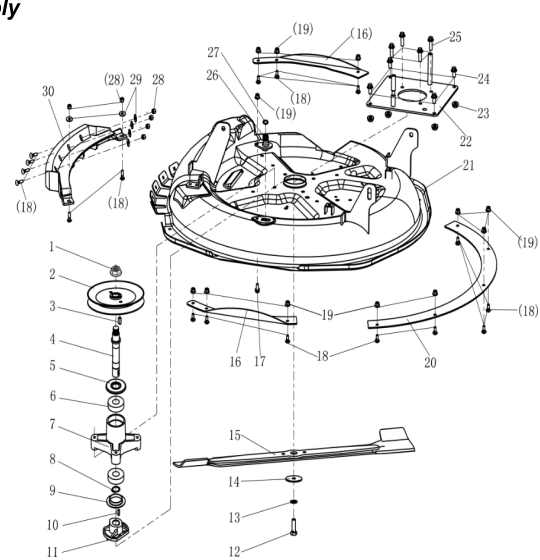

Ref #	Part No.	Description	Qty
0	40054370	Deck Assembly	1
1	20070627	Nut	1
2	20088497	Deck pulley	1
3	20061650	Key C6×18	1
4	20070622	Axle XC62	1
5	20071285	Bearing Cover	1
6	20061625	Bearing 6204-2RZ	2
7	20054347	Blade Adapter	1
8	20061488	Spring Washer 19	1
9	20070635	Protective Cover	1
10	20061651	Semicircular keys 4×16	1
11	20054345	Blade Key Cover	1
12	20061267	Bolt 3/8"-24 - 1 1/4"	1
13	20061497	Washer	1
14	20070623	Disc Washer	1
15	20095776	Blade	1
16	20095256	Left Reinforcement Plate	1
17	20061200	Bolt M6x16	1
18	20061289	Bolt M6x16	17
19	20061385	Nut M6	12
20	20090413	Rear Reinforcement Plate	1
21	20093392	Deck	1
22	20093345	Fixed Base	1
23	20061348	Nut M8	4
24	20061298	Bolt M8x25	4
25	20061264	Bolt M8x35	4
26	20070624	Water Nozzle	1
27	20055756	O ring 11.2×2.65	1
28	20061421	Nut M6	6
29	20061539	Washer	6
30	20090410	Decorative Strip	1

Cutting And Tension Assembly

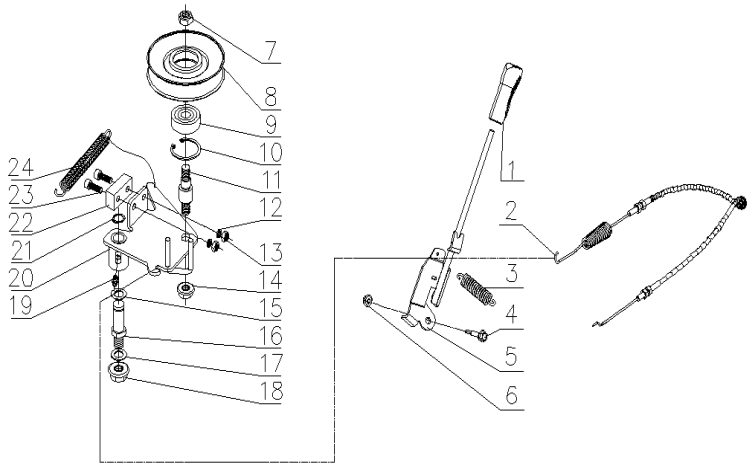

Ref #	Part No.	Description	Qty
0	40054204	Cutting And Tension Assembly	1
1	20070900	Handle	1
2	20094324	Cable Assembly	1
3	20070645	Tension Spring	1
4	20070488	Screw XC62	1
5	20092885	Cutting Clutch Lever Weldment	1
6	20061348	Nut M8	1
7	20061403	Nut M10*1.25	1
8	20070536	Tension Pulley	1
9	20092588	Bearing 6301-2RS	1
10	20061549	Spring Washer 37	1
11	20070518	Tensioning Pulley Axle	1
12	20061487	Spring Washer 6	2
13	20061390	Nut M6	2
14	20061405	Nut M10*1.25	1
15	20061499	Wave Spring Washer	1
16	20070516	Cutting Tensioning Axle	1
17	20061538	Washer 12x1.0	2
18	20061359	Nut M12*1.25	1
19	20092292	Injection Nozzle Assembly M6	1
20	20070528	Cutting Tensioning Arm Assembly	1
21	20061489	Spring Washer 13	1
22	20070517	Brake Shoe	1
23	20061055	Screw M6*20	2
24	20070515	Tension Spring 2x12	1

Deck Lifting Assembly

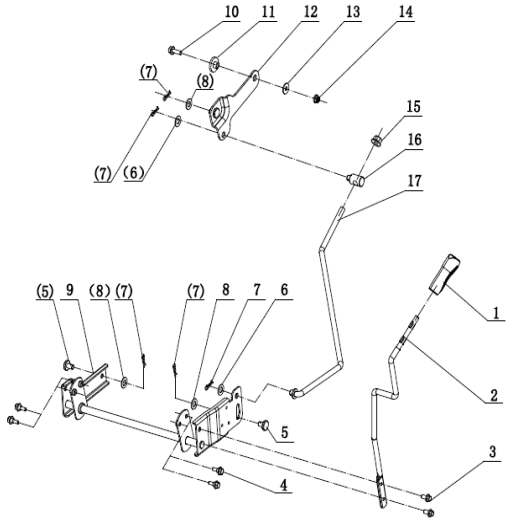

Ref #	Part No.	Description	Qty
0	40053993	Deck Lifting Assembly	1
1	20070900	Handle	1
2	20092856	Deck Lifting Arm Rod	1
3	20082800	Screw	2
4	20061053	Screw M8x20	4
5	20092729	Deck Fixing Pin	2
6	20061538	Washer 12x24x1	2
7	20071251	Spring Pin 3	5
8	20061497	Washer 10	3
9	20092832	Lift Arm Weldment	1
10	20061264	Bolt M8x35	1
11	20092877	Front Suspension Arm Bush	1
12	20093003	Front Suspension Arm	1
13	20061541	Washer 8	1
14	20061348	Nut M8	1
15	20061359	Nut M12x1.25	1
16	20092809	Pin	1
17	20092788	Link Rod	1

Electrical Parts Assembly

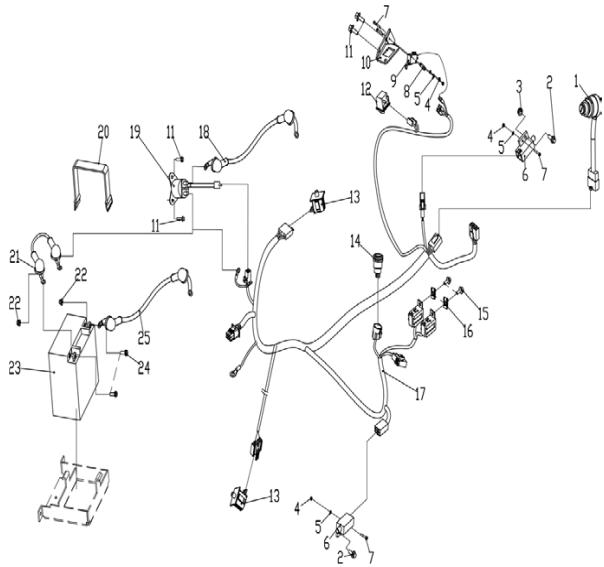

Ref #	Part No.	Description	Qty
1	20089345	Ignition Key Switch	1
2	20061201	Bolt M6x16	2
3	20061385	Nut M6	2
4	20061334	Nut M3	4
5	20084633	Washer 3	4
6	20070745	Switch (On/Off)	2
7	20051763	Bolt M3x20	4
8	20084628	Micro Switch Pad	1
9	20071232	Switch Assembly	1
10	20093340	Switch Retaining Plate	1
11	20082800	Tapping Screw M6*16	3
12	20086271	Switch	1
13	20092799	Seat Switch	2
14	20089045	Self-Reset Button Switch (w/ blue light)	1
15	20062522	Bolt M5x12	2
16	20089880	Nut M5	2
17	20094525	Cable Assembly	1
18	20094523	Start Line	1
19	20071221	Relay	1
20	20070744	Battery Strap	1
21	20090718	Start Line	1
22	20061343	Nut M5	2
23	20092079	Battery	1
24	20051755	Bolt M5x16	2
25	20090717	Negative Line	1

Fuel Tank Assembly

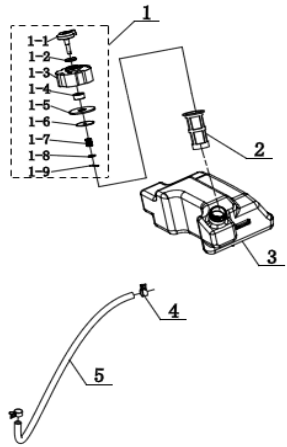

Ref #	Part No.	Description	Qty
0	40053999	Fuel Tank Assembly	1
1	20071747	Fuel Cap	1
1.1	20059754	Rotary Knob	1
1.2	20071493	O-ring Seal	1
1.3	20059760	Body	1
1.4	20059763	Filter Element	1
1.5	20090126	Sealing Gasket	1
1.6	20071676	Washer 6×25×1.5	1
1.7	20059764	Spring	1
1.8	20061445	Washer 5X12X1.5	1
1.9	20059765	Pin	1
2	20059766	Fuel Cap Filter	1
3	20092861	Fuel Tank	1
4	20062744	Hose clamp	2
5	20070865	Fuel Hose	1

Belt Cover Assembly

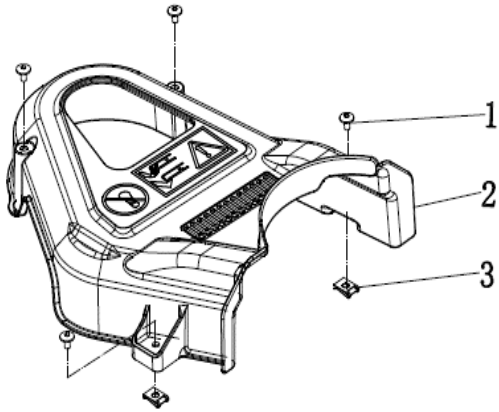

Ref #	Part No.	Description	Qty
0	40054068	Belt Cover Assembly	1
1	20060923	Hexagon Screw M6X12	4
2	20093332	Belt Cover	1
3	20070630	Clip Nut M6	2

Seat Assembly

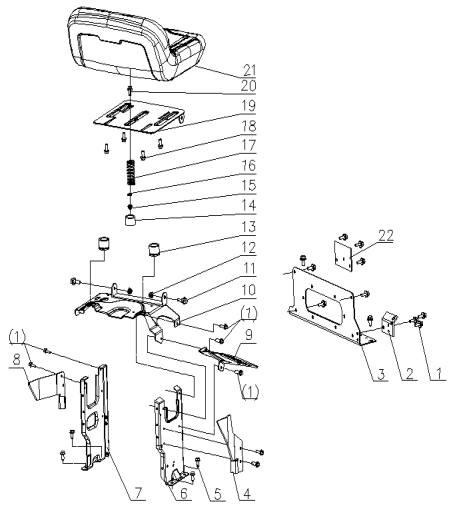

Ref #	Part No.	Description	Qty
0	192907110000	Seat Assembly	1
1	20082800	Screw M6x16	18
2	20092884	Cable holder	1
3	20092795	Intermediate Fixing Plate	1
4	20092805	Right Support Plate	1
5	20082799	Hexagon Flange Self-Tapping Screw M8X20	4
6	20092886	Right Bracket	1
7	20094390	Left Bracket	1
8	20092762	Left Support Bracket	1
9	20095448	Gear Plate	1
10	20092778	Seat Support Plate	1
11	20088755	Screw	2
12	20061348	Nut M8	2
13	20070594	Rubber Pad	2
14	20095333	Seat Spring Plug	
15	20061385	Hexagon Flange Locking Nut M6	1
16	20061539	Big Washer 6	1
17	20094521	Seat Spring	1
18	20061274	Bolt M8x20	5
19	20092829	Seat Base	1
20	20051759	Cross Recessed Pan Head Screw	1
21	20092693	Seat 2-3	1
22	20094413	Fuel Tank Bracket	1

Side Discharge Chute Assembly

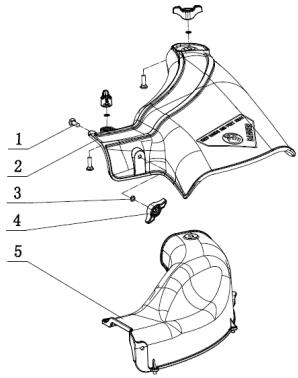

Ref #	Part No.	Description	Qty
0	40054073	Side Discharge Chute Assembly	1
1	20095732	Square Neck Bolt M8x35	3
2	20093385	Discharge Chute	1
3	20093193	Washer	3
4	20093307	Rotary Knob	3
5	20093374	Mulching Cover	1

Rear Chute Assembly

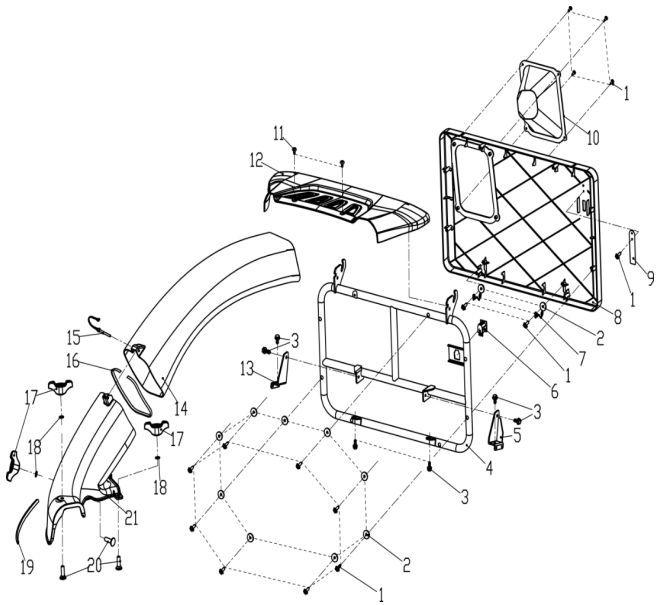

Ref #	Part No.	Description	Qty
1	20060935	Tapping Screw ST5x16	15
2	20071676	Gasket 6.5×25×1.4	10
3	20082799	Flange Bolt 5/16-18TX3/4	6
4	20095766	Hanging Frame	1
5	20095729	Hook Frame Left Support	1
6	20092799	Seat Switch	1
7	20094638	Dust Bag Lock	2
8	20095734	Tailgate Cover	1
9	20094637	Switch Pressure Plate	1
10	20094639	Dust Bag	1
11	20060923	Bolt M6x12	2
12	20095750	Back Cover	1
13	20095769	Hook Frame Right Support	1
14	20095765	Upper Discharge Chute	1
15	20095743	D-shaped Pin 6x50	1
16	20071687-54	Sealed Wool 54CM	1
17	20093307	Rotary Knob	3
18	20093193	Anti-drop Gasket	3
19	20071687	Sealed Wool 52CM	1
20	20095732	Square Neck Bolt M8x35	3
21	20095758	Lower Discharge Chute	1

Catcher Assembly

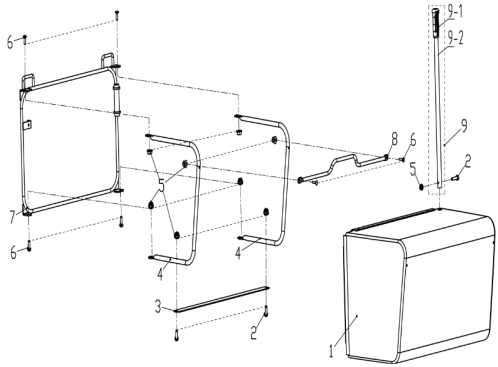

Ref #	Part No.	Description	Qty
1	20094635	Catcher Bag, 130L	1
2	20060851	Screw M6×25	3
3	20095748	Catcher Bag Base Plate	1
4	20095726	Catcher Bag Side Frame	2
5	20061421	Nut M6	9
6	20061249	Square Neck Bolt M6x30	6
7	20095739	Catcher Bag Front Frame	1
8	20094634	Catcher Frame Handle	1
9	192907141000	Catcher Lifting handle Assembly	1
9.1	20070644	Lever	1
9.2	20070643	Handle	1

Customer Service:

303 Warrigal Road, Cheltenham, Victoria 3192, Australia

Telephone: 1300 454 585

Website: www.BWMachinery.com.au

Email: admin@bwmachinery.com.au

Spare parts are available from our dealers and our official website